AKADEMIKA

ACL-FM: FREQUENCY MODULATION TRANSMITTER KIT
&
ACL-FD: FREQUENCY DEMODULATION RECEIVER KIT

EXPERIMENTAL MANUAL

……A MESSAGE FROM

Today's system designers are faced with tomorrow's problems. ANALOG COMMUNICATION is one of the important subject need to teach while learning electronics.
It is our vision to provide you with the product you need for training ensuring lasting reliability & quality.

OUR MOTTO:

- Light years ahead – refers to leadership.

As leaders in our industry in India, we are totally committed to servicing as the Standard against which all are measured in the areas of

• Design • Quality • Value • Delivery • Support.

We are truly light years ahead of our competition in this area. That means that you our valued customers are guaranteed satisfaction.

As you will move through this manual you will quickly discover that we have complete, truly innovative & superior training products. We are so committed to quality that we back our products with a complete comprehensive warranty.

AKADEMIKA LAB SOLUTIONS

Sr. No. 15/8/1, Unit No.9, Kruti Industrial Estate, Opp.

Karishma Society, Off Karve Road, Kothrud, Pune,

Maharashtra- 411038

INDIA

Contact No.:+91-7447438443

Email: lab@akademika.in

www.akademika.in

SAFETY RULES

Carefully follow the instructions contained in this manual as they provide you with important points on safety during the installation, use and maintenance. Keep this manual always with you for easy reference.

Arrange all accessories, in order after unpacking, so that its integrity is checked with respect to its checklist. Also ensure that no visible damage as such appear on any accessories.

Before connecting the power supply to the kit, be sure that the jumpers and connecting cords are connected correctly as per experiment.

In **FREQUENCY MODULATION TRANSMITTER TRAINER KIT (ACL-FM) & FREQUENCY DEMODULATION TRAINER KIT (ACL-FD)** modules signals are to be monitored with an oscilloscope as explained in the manual. The scope input channel should be ac coupled, unless otherwise indicated. For observation of signals on oscilloscope either use X10 (Attenuation Probe) or 180Ω resistance in series with normal oscilloscope probe.

A frequency counter should be used for all frequency measurements.
Use the trimming tool, supplied with the kits, for trimming inductors. Never use a screwdriver, as this may damage the inductors core. Also take care not to turn any inductors core past its end stop, as they may also result in damage.

This kit must be employed only for the use for which it has been conceived, i.e. as educational kit, and must be used under the direct survey of expert personnel. Any other use is improper and so dangerous. The manufacturer cannot be considered responsible for eventual damages due to improper, wrong or unreasonable uses.

In case of any fault or malfunctioning in the trainer kit, turn off the power supply and do not tamper the kit. In case servicing is required, contact the service center for technical assistance.

The kits are liable to malfunction/under-perform if they are not operated under standard environmental conditions of temperature and humidity.

WARRANTY

This kit is warranted against defects in workmanship and materials. Any failure due to defect in either workmanship or material should occur under normal use within a year from the original date of purchase, such failure will be corrected free of charge to the purchaser by repair or replacement of defective part or parts. When the failure is result of user's neglect, natural disaster or accident, we charge for repairs regardless of the warranty period. The warranty does not cover perishable items like connecting cords, Crystals, etc. and other imported items.

This warranty is subject to the following conditions and limitations. The warranty is void and inapplicable if the defective product is not brought or sent to our authorized service center or sales outlet within the warranty period. Defective product is, on Akademika Lab Solutions sole judgment. The defective product will be replaced with new one or repaired without charge or with charge.

In the warranty period if the service is needed, purchaser should get in touch with service center or sales outlet. The purchaser should return the product to the service center or sales outlet at his or her sole expense. The loss and damage in transit will be outside the preview of this warranty. A returned product must be accompanied by a written description of the defects. Type and Model No. of kit /system has to be mentioned specifically. We return the product to the purchaser at our expense. In case that warranty does not cover the product on Akademika Lab Solutions judgment, we repair the product after obtaining prior permission from purchaser who receives an estimate statement about repairing charges. In such case, Akademika Lab Solutions bares the transporting expenses required to send back all the repaired products for the moment, and then repairs and transporting expenses will be charged against the purchaser by the statement of accounts.

When the authorized sales agents sell our products, they must notify the purchaser of the warranty contents, but have no rights to stretch the meaning of original warranty contents or offer additional warranty. Akademika Lab Solutions does not provide any other promise or suggestive warranty and hold no liability for the damage caused by negligence, abnormal use or natural disaster. Akademika Lab Solutions is not responsible for the damages even if it is notified of above dangers in advance as well.

For more special service or overall repairs, maintenance and up gradation of products, be sure to contact our service center or sales outlet.

INDEX

SR. NO	CHAPTER	PAGE NO
01.	Technical Specifications	06
02.	Functional Block	08
03.	Introduction	10
04.	Switch Fault	19
05.	Circuit Diagram	20
06.	Experiment No.1 Study of Frequency Modulation	29
07.	Experiment No.2 Study of Pre-Emphasis Circuit	47
08.	Experiment No.3 Study of Frequency Demodulation	51
09.	Experiment No.4 Study of De-Emphasis Circuit	81
10.	Experiment No.5 Effect of Pre-Emphasis and De-Emphasis Using Varactor Modulator And Different Demodulators	85
11.	Experiment No.6 Study of Phase Modulation	89
12.	Experiment No.7 Study of Phase Demodulation	95
13.	Experiment No.8 Voice Transmission on Various Modulation and Demodulation Methods	101

TECHNICAL SPECIFICATIONS

ACL-FM Frequency Modulation Transmitter Kit

Synchronous Function Generator

Waveforms : Sine, Triangular, Square.
Amplitude : 0 to 2Vp-p variable.
Frequency Range : 1)1Hz to 10Hz.
: 2)10Hz to 100Hz.
3)100Hz to 1 KHz.
4)1 KHz to 10 KHz.
5)10 KHz to 100 KHz.

Audio Input : Audio preamplifier with microphone.

FM Modulators : 1) Varactor Modulator with carrier frequency adjustment
2) Reactance modulator with variable carrier Frequency

PM Modulator
Operating Frequency : Adjustable from 400 KHz to 500 KHz.
Input Amplitude : 1 V p-p with integration circuit for indirect frequency modulation.

Pre-Emphasis Circuit : Time period of 50us

Frequency Converter (Mixer)
Dual gate MOSFET
Inputs : Local oscillator and RF Signal
Output Frequency : 455 KHz adjustable

FI Filter : Dual Tune LC.
Transmitter Output Frequency : 455 KHz.
Interconnection : 2mm banana socket.
Power Supply : (GND, +5V, +12V, -12V)

ACL-FD Frequency Demodulation Receiver Kit

Amplitude Limiter
Operating Frequency : 455 KHz
Input Amplitude : 0.5 to 5Vp-p
Output Amplitude : 1.5V p-p

FM Demodulators :
1.) Foster – Seely Detector
2.) Ratio Detector
3.) PLL Detector
4.) Quadrature Detector
5.) Detuned Resonance Detector

Frequency Range : Adjustable from 400 KHz to **500 KHz**

Input Amplitude : 1.5Vp-p

De-emphasis Circuit : Time period of 50us

Low Pass Filter : With Cut off Frequency of 3.4 KHz
Audio Output : Amplifier with Speaker and Headphones.
Interconnection : 2mm Banana Socket.
Power Supply : (GND, +5V, +12V, -12V)

Accessories:

ACL-FM

			Quantity
1	Mini Links PCS2 Patch Cord	Male To Male	6
2	Long Links PCS2 Patch Cord	Male To Male	2
3	ACL-FM & FD Experimental Manual		1
4	Power supply		1
5	Headphone		1
6	Power Cord		1

ACL-FD

1	Short Links PCS2 Patch Cord	Male To Male	7
2	Jumper Caps Small (5 MM)		5

FUNCTIONAL BLOCK ACL-FM

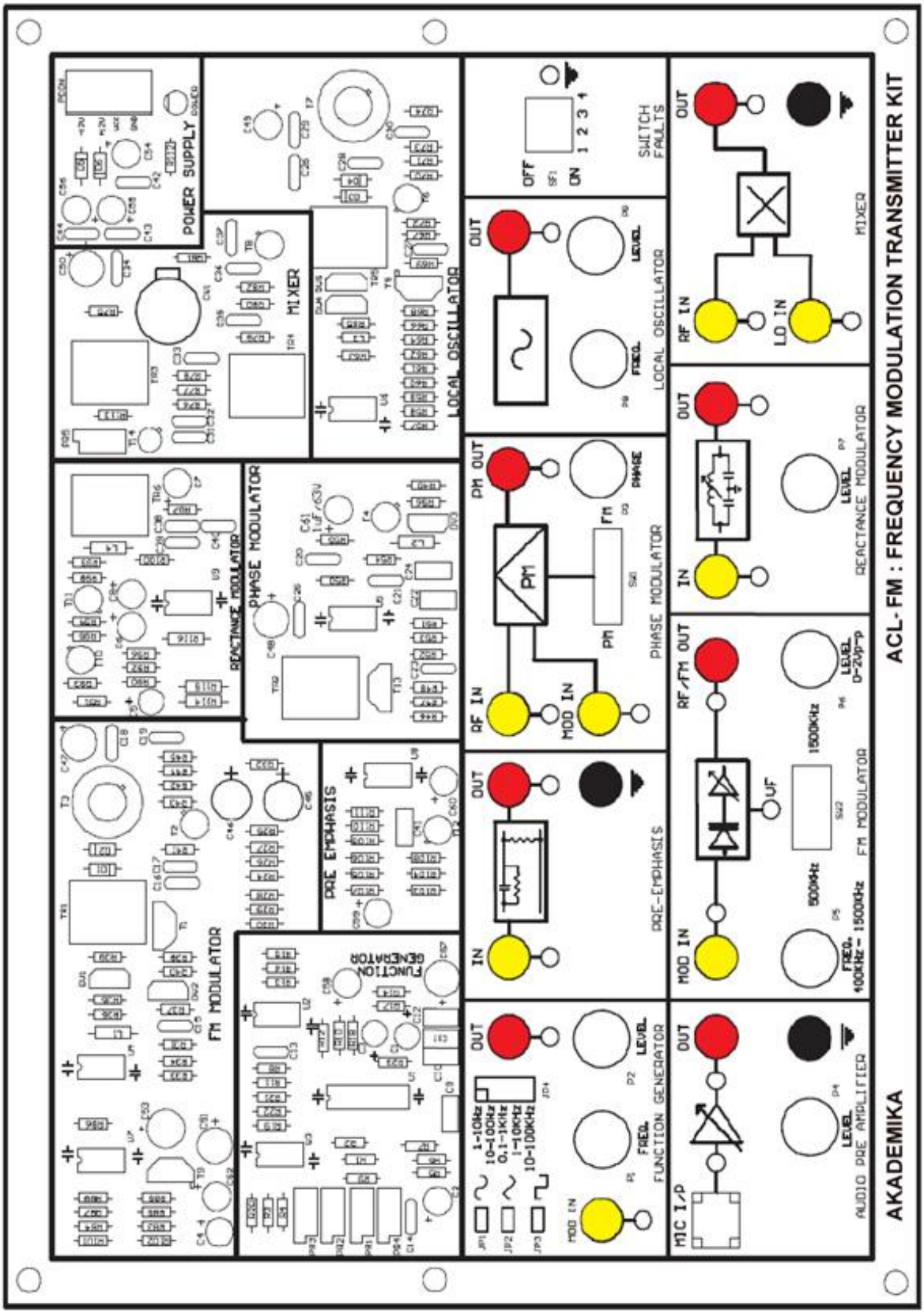

ACL-FD

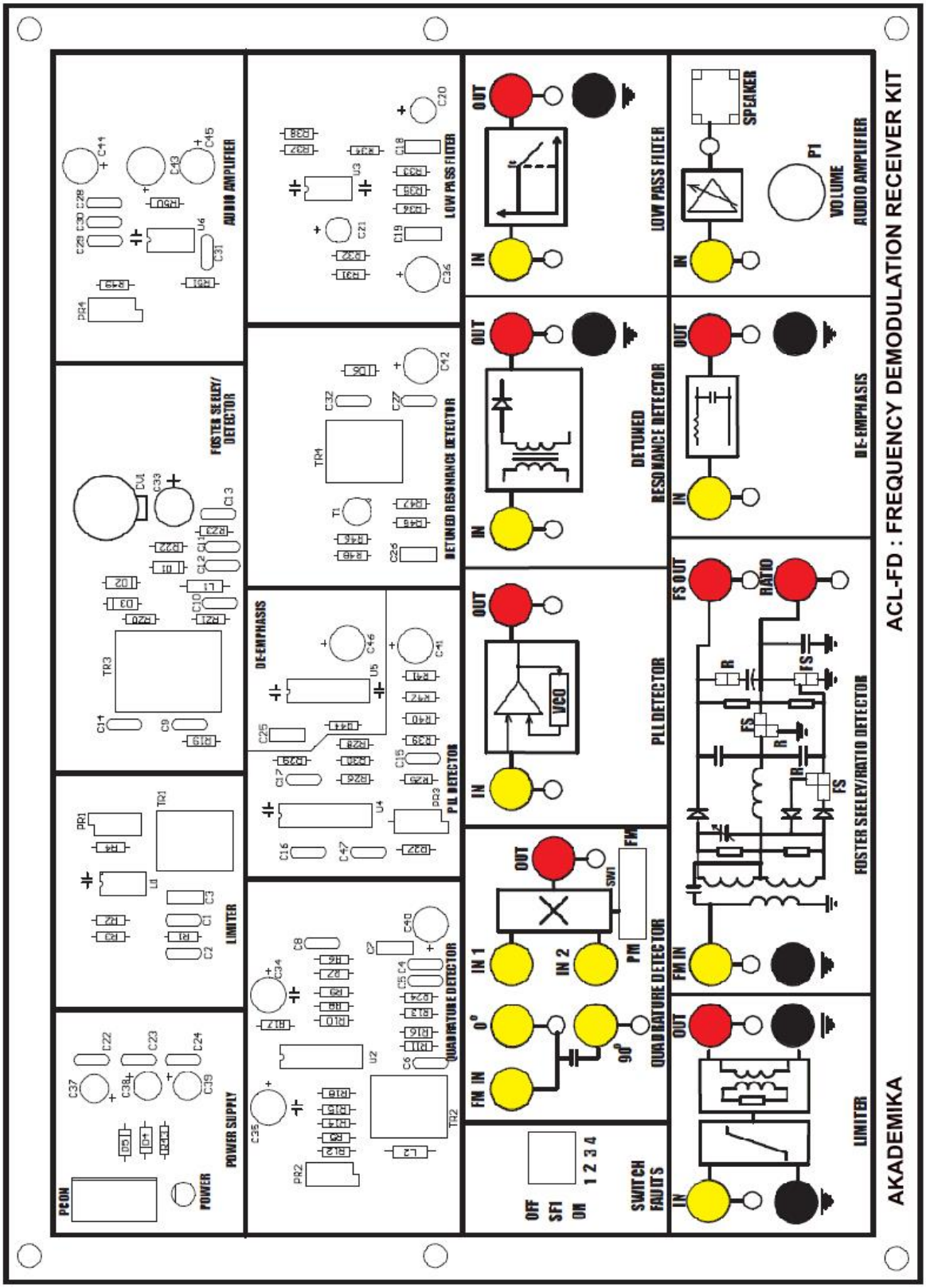
ACL-FD : FREQUENCY DEMODULATION RECEIVER KIT
AKADEMIKA
AUDIO AMPLIFIER
LOW PASS FILTER
FOSTER SEELEY/ DETECTOR
DETUNED RESONANCE DETECTOR
DE-EMPHASIS
PLL DETECTOR
LIMITER
QUADRATURE DETECTOR
POWER SUPPLY
SWITCH FAULTS
SPEAKER
VOLUME
FS OUT
RATIO
FM IN
IN
OUT
VCO
IN 1
IN 2
FM
PM
0°
90°
OFF
SF1
ON
1 2 3 4

INTRODUCTION

The series **ACL-FM to ACL-FD ANALOG COMMUNICATION TRAINING LAB** is a modular system for the development of exercises and theoretical-experimental courses on the fundamentals of telecommunications. The unit consists of a set of modules, each including one or more functional blocks typical of communication systems.
The system is highly innovative from a technological as well as an educational point of view. The modules are used as “basic blocks” to build up in a flexible way the different communication systems, and to examine all the peculiar operating characteristics.
The only external instruments required are a power supply unit and an oscilloscope. The remaining circuits and instruments (Function generator, RF, Filters; Microphone; Loudspeaker, etc.) are already included in the modules.
ACL-FM and ACL-FD covers the principal of Frequency Modulation and Phase Modulation communication techniques. This system offers choice of various modulators and demodulators, which allows student to draw comparison between different methods of Frequency modulation and Phase modulation and Demodulation.
The range of available modules enables the gradual development of the program starting from the study of single circuits (e.g. the FM modulator) up to the analysis of complete systems.
At most care has been laid in the design and quality control of all circuits, to ensure the repeatability of the results of the experiments. The trainer kits are provided with extensive test points allowing students to investigate the various aspects of system operation. Each kit is equipped with correlated courseware to guide students through the application and demonstration of communication techniques and concepts. In addition circuit description manual guides the students through working of each blocks, circuit wise explanation of each kit.

ACL-FM

Function Generator and Low Frequency Modulator

The integrated circuit U1 (ICL8038) generates sine (pin 2) and triangular waveform (pin 3) and the square waveform at the pin no.9. The capacitance which can be connected to pin 10 enable to select the range (From 1Hz or 100 KHz max). The frequency is varied with the linear pot **P1 (FREQ)**. (RV5 limits the inferior frequency). The presets PR1 and PR3 adjust the symmetry and the form of the sine signal.
With the jumpers JP1 and JP2, the sine and the triangular signals are applied to the amplifier U2 (LF353) and then to the output. The pot **P2 (LEVEL)** varies the signal amplitude With JP3 the square signal can be applied to the output amplifier.
Frequency range can be selected with help of jumpers provided.
Now as in our experiments the frequency modulation is carried out at higher carrier frequencies, sometimes it may not possible to see the frequency deviation clearly on the normal oscilloscope. Hence in the circuit of function generator only the provision is made to carry out the frequency modulation at lower frequencies for the clear visibility of the frequency deviation.
This is done using the application of IC 8038 as frequency modulator. The modulating signal is directly applied to pin no. 8 of IC 8038 merely providing DC decoupling capacitor. By altering this modulation voltage, frequency modulation is achieved.

For this one BS2 is provided in the circuit of function generator. The students have to apply the modulating signal externally.

Frequency Modulator

A.) Varactor Modulator

The VCO is based on a Hartley oscillator consisting of: transistor BF241; primary of the transformer in parallel to the varicap diodes; reaction between emitter and collector of the transistor carried out with a capacity in series to a resistor.
The signal is taken from the secondary of the transformer and amplified by a 2-transistor stage. The trimmer RV9 adjusts the amplitude of the signal from 0 to 2Vpp.
The frequency of the VCO is varied with the trimmer RV7, which supplies the bias voltage to the Varicaps (from the low frequency amplifier U3 LM741). A switch selects the range (500 or 1500 KHz max.). A low frequency signal for FM modulation of the VCO, and a D.C. voltage used to carry out an automatic frequency circuit can be applied across the input of an amplifier.
The variations in the capacitance form part of the tuned circuit that is used to generate the FM signal to be transmitted.
We can see the tuned circuit, which sets the operating frequency of the oscillator and the varactor, which is effectively in parallel with the tuned circuit.
Two other components which may not be immediately obvious are C13 and L3. C13 is a DC blocking capacitor to provide DC isolation between the Oscillator and the collector of the transmitter. L3 is an RF choke, which allows the information signal through to the varactor but blocks the RF signals.

The Operation of the Varactor Modulator

- The information signal is applied to the input of low frequency amplifier U3 LM741 appears amplified and inverted at the output.
- This low frequency signal passes through the RF choke and is applied across the varactor diode.
- The varactor diode changes its capacitance in sympathy with the information signal and therefore changes the total value of the capacitance in the tuned circuit.
- The changing value of capacitance causes the oscillator frequency to increase and decrease under the control of the information signal.

The output is therefore an FM signal.

B.) Reactance Modulator

The carrier generator section is based on a Colpitt's oscillator consisting of; Transistor 2N2222A; primary of the transformer parallel to the two capacitors.
The signal is taken from the second end of transformer primary and is then buffered using IC TL082. The linear potentiometer (P7) adjusts the amplitude of the carrier signal from 0 to 2 Vp-p.
The frequency of the carrier signal is varied by varying the coil of the transformer TR6. This variation is nothing but it varies the inductance of the coil connected in the tank circuit of the oscillator. The frequency can be varied from 400 KHz to 500 KHz.
The transistor T10 along with its associated components acts as a variable capacitor. (When the modulating signal is applied to the base of transistor T10, the emitter to base bias varies at the modulation rate. This causes to change the collector voltage at the same modulation rate. This change in voltage causes to change the output capacitance.) These variations in capacitance form part of the tuned circuit that is used to generate the FM signal to be transmitted.

The Operation of the Reactance Modulator

- The information signal is applied to the base of transistor T10. This causes to change the emitter to base bias to vary with the modulating rate. Due to this the collector voltage also varies with the modulating voltage.
- This variation in collector voltage causes to vary the output capacitance of the first stage; i.e. output capacitance will change as per the amplitude of the modulating signal. When the output capacitance decreases, the instantaneous frequency of oscillator circuit increases. When the output capacitance increases instantaneous frequency of the oscillator circuit decreases.
- These variations in output capacitance are applied to the oscillator circuit that inurn changes the frequency of the oscillator.
  The output is therefore FM signal.

Audio Preamplifier

It accepts signal from microphone. The Voltage gain about 20 dB. It has got the adjustable output level.

Pre Emphasis Circuit

The pr-emphasis circuit consists of a simple RC filter. This filter along with the active element such as transistor boosts the higher modulating frequencies.
The amount of pre-emphasis in European, Asian and Australian broadcasting and TV sound transmission is 50 μS.
A 50 μS pre-emphasis corresponds to the frequency response curve that is 3 dB up at the frequency whose time constant RC is 50 μS. this frequency is given by $f = 1/ (2\Pi RC)$ and is therefore 3180 Hz.
Hence here we have chosen the values of R & C as follows;

R = 50K C = 1 nF

Phase Modulator

The actual modulator consists of a FET amplifier with resonant load; the low frequency modulating signal varies, with the Varicap diode, the central frequency of the circuit (455KHz) when the modulating signal is lacking). This introduces a phase variation in the RF signal applied to the input. The operational amplifier, when inserted, integrates the low frequency signal so to obtain frequency modulation from the phase modulator.

Local Oscillator

The VCO is based on a Hartley oscillator consisting of: transistor BF241; primary of the transformer in parallel to the varicap diodes; reaction between emitter and collector of the transistor carried out with a capacity in series to a resistor.
The signal is taken from the secondary of the transformer and amplified by a 2-transistor stage. The trimmer RV11 adjusts the amplitude of the signal from 0 to 2Vpp.
The frequency of the VCO is varied with the pot RV10, which supplies the bias voltage to the Varicaps (from the low frequency amplifier U5 LM741). A low frequency signal for FM modulation of the VCO, and a D.C. voltage used to carry out an automatic frequency circuit can be applied across the input of an amplifier.
This is an oscillator producing a sinusoidal output similar to the carrier wave oscillator in the transmitter. In this case however, the frequency of its output is adjustable.
The same tuning control is used to adjust the frequency of both the local oscillator and the center frequency of the RF amplifier. The local oscillator is always maintained at a frequency, which is higher, by a fixed amount, than the incoming RF signals.
The local oscillator frequency therefore follows, or tracks, the RF amplifier frequency.

This will prove to be very useful, as we will see in the next section.

Mixer

The mixer is composed of three sections: A MOSFET, carrying out the interaction between the LO (Local Oscillator) and the RF signal; a low pass filter centered at 455 KHz, consisting in two tuned circuits coupled between them by a variable capacitor; an output amplifier stage.

The coils of the tuned circuits can be accessed from the rear side and enable the calibration of the filter also at frequencies different from 455 KHz (between 400 and 500 KHz). The coupling capacity enables to widen or reduce the band pass of the same filter.

The mixer performs a similar function to the modulator in the transmitter.

We may remember that the transmitter modulator accepts the information signal and the carrier frequency, and produces the carrier plus the upper and lower sidebands.

The mixer in the receiver combines the signal from the RF amplifier and the frequency input from the local oscillator to produce three frequencies:

- A ‘difference’ frequency of local oscillator frequency – RF signal frequency.
- A ‘sum’ frequency equal to local oscillator frequency + RF signal frequency.
- A component at the local oscillator frequency.

Mixing two signals to produce such components is called a ‘heterodyne’ process.

When this is carried out at frequencies which are above the audio spectrum, called ‘supersonic’ frequencies, the type of receiver is called a ‘super-heterodyne’ receiver. This is normally abbreviated to ‘superhet’. It is not a modern idea having been invented in the year 1917.

We saw how the local oscillator tracks the RF amplifier so that the difference between the two frequencies is maintained at a constant value. We saw how the local oscillator tracks the RF amplifier so that the difference between the two frequencies is maintained at a constant value. In ACL-FM this difference is actually 455KHz.

As an example, if the radio is tuned to receive a broadcast station, which transmits at 800KHz, the local oscillator will be running at 1.255MHz. The difference frequency is 1.255MHz – 800KHz = 455KHz.

If the radio is now retuned to receive a different station being broadcast on 700KHz, the tuning control re-adjusts the RF amplifier to provide maximum gain at 700KHz and the local oscillator to 1.155MHz. The difference frequency is still maintained at the required 455KHz.

This frequency difference therefore remains constant regardless of the frequency to which the radio is actually tuned and is called the intermediate frequency (IF).

The local oscillator output is shown larger than the IF and RF frequency components, this is usually the case. However, there is no fixed relationship between the actual amplitudes. Similarly, the IF and RF amplitudes are shown as being equal in amplitude but again there is no significance in this.

ACL-FD

Limiter

The integrated circuit CA3028 has a differential amplifier (T1 and T2) inside powered by a constant current source (T3).

In the used configuration, the integrate carries out an amplifier with emitter coupling, consisting in an emitter follower (T1) with a common base (T2) in cascade. The output is taken on the collector of T2, with a circuit tuned at 455KHz and a transformer. The circuit offers very good performances as amplitude limiters, as the saturation of the transistors T1 and T2 is avoided by the action of the constant source T3.
An amplitude limiter circuit is able to place an upper and lower limit on the size of a signal. Any signal which exceeds these levels are simply chopped off. This makes it very easy to remove any unwanted amplitude modulation due to noise or interference.

Foster-Seely Discriminator
With the jumpers, the circuit can be configured so to carry out a Foster-Seely Detector or a Ratio Detector. The FM signal is inductively coupled to the resonant circuit L2-C41, tuned to the central frequency of the modulated signal. The same signal is also taken, with C15, to the main socket of L2. The diodes D1 and D3, with the respective low pass filters C-R, form two envelope detectors.
Fo is the frequency at which the circuit L2-CV1 is tuned. The operation of the circuit is analyzed in three situations:

- Instantaneous frequency fof the input FM signal equal to Fo.
- Instantaneous input frequency higher than Fo.
- Instantaneous input frequency lower than Fo.

<u>f = Fo</u>

In the two secondary of L2 we add two voltages (Fig. 1a). One is the one induced with L1 by the input signal vFM; the other is the input signal coupled directly via C1. Being at the resonance frequency, the induced voltage v_{IND} will be shifted of 90° in respect to the voltage vFM. The voltage coupled directly through C1 can be considered, if the reactance of C1 is small at the signal frequency, in phase with the input vFM.

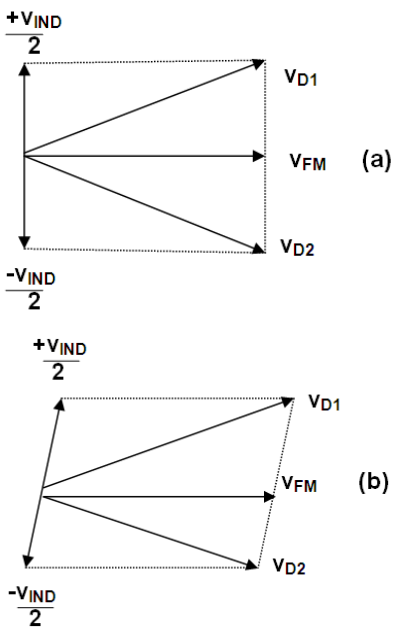

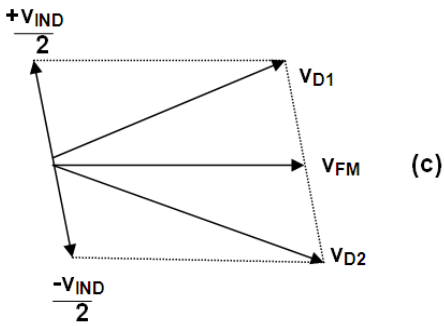

Fig.1 Phase Diagram

The voltages reaching D1 and D2 are the vectorial sum of vFM and +/-v_{ind}/2, and have the same amplitude but opposed sign. The output vo, which is the sum of the two detected signals, in this case will be null.

f >Fo

When the instantaneous frequency of the input FM signal is superior to Fo, the resonant circuit L2-C2 has an inductive behavior and the vectorial diagram fig. 1b is obtained. The voltages of the diodes have in this case different amplitudes, and the resulting output voltage will be positive.

f <Fo

When instantaneous frequency of the input FM signal is lower than Fo,the resonant circuit L2-C2 has a capacitive behavior and the vectorial diagram of fig. 1c is obtained. The voltages on the diodes have still different amplitudes, but the resulting voltage will be negative.
The main disadvantage of the Foster-Seely demodulator is that it detects amplitude a variation of the input signal, as the voltage amplitude vD1 and vD2 on the diodes depends also on amplitude of the input signal. This inconvenience is minimized in the ratio demodulator.

Ratio Discriminator
There are a few modifications that have provided a much improved protection from noise. The operation of the circuit, as concerns the coupling of the FM signal to the two detection circuits and the vectorial diagrams, is similar to what seen for the Foster-Seely discriminator. The capacitor C20, with higher value, has the purpose to highly reduce the amplitude voltage fluctuations vab, due to amplitude variations of the input signal. In this way the output voltage vo is not affected by unwished amplitude variations. We can write, in fact:

$$vo = \frac{vae + veb}{2} - veb = \frac{vae - veb}{2} =$$

$$vo = \frac{vae + veb}{2} \bullet \frac{(vae / veb) - 1}{(vae / veb) + 1} = \frac{vab}{2} \bullet \frac{(vae / veb) - 1}{(vae / veb) + 1}$$

As vaeb is practically constant, the output vo depends only on the ration vae/veb, which varies only by the effect of the variations of the input frequency signal, and does not cause amplitude variations.

Phase – Locked Loop (PLL) Detector

This is another demodulator that employs a phase comparator circuit. It is a very good demodulator and has the advantage that it is available as a self-contained integrated circuit so there is no setting up required-you plug it in and it works. For these reasons it is often used in commercial broadcast receivers. It has very low levels of distortion and is almost immune from external noise signals and provides very low levels of distortion. Altogether a very nice circuit

The overall action of the circuit may, at first, seem rather pointless. As we can see in Figure shown on kit there is a voltage controlled oscillator (VCO). The frequency of this oscillator is controlled by the DC output voltage from the output of the low pass filter. Now, this DC voltage keeps the oscillator running at the same frequency as the original input signal and 90^0 out of phase.

The question often arises as to why we would want the oscillator to run at the same frequency and 90^0 out of phase. And if we did, then why not just add a phase shifting circuit at the input to give the 90^0 phase shift?

The answer can be seen by imagining what happens when the input frequency changes – as it would with an FM signal.

If the input frequency increases and decreases, the VCO frequency is made to follow it. To do this, the input control voltage must increase and decrease. It is these changes of DC voltage level that form the demodulated signal.

The Frequency response is highly linear as shown in Experimental Manual.

Quadrature Detector

This includes: a phase shifter circuit; a product detector IC2 (LM1496); a low pass filter type RC across the output of the detector. The product detector multiplies the two input signals between them and can be used, alone, to demodulate the signals modulated in phase.

In combination with the shifter circuit there is a Quadrature Detector, which can be used to demodulate the signals modulated in frequency.

This is another demodulator; again fairly simple but is an improvement over the previous design. It causes less distortion and is also better, though not perfect, when it comes to removing any superimposed noise.

The incoming signal is passed through a phase-shifting circuit. The degree of phase shift that occurs is determined by the exact frequency of the signal at any particular instant.

The rules are:

If the carrier is un-modulated, the phase shift is 90^0.

If the carrier increases in frequency, the phase shift is GREATER THAN 90^0.

If the carrier decreases in frequency, the phase shift is LESS THAN 90^0.

We now only require a circuit able to detect the changes in the phase of the signal.

Detuned Resonance Detector

This is the simplest form of the demodulator.

In this the parallel tuned circuit deliberately detuned so that the incoming FM signal are first converted to AM signal and then using the diode detector circuit we get back the original signal.

The output of the limiter circuit is applied to the base of transistor T1 (2N2222A) . The coil of the transformer TR4 and the capacitor C32 forms the parallel tuned circuit. This circuit is deliberately detuned to the center frequency (i.e. 455 KHz). So that at the secondary of the transformer TR4 we get the amplitude modulated signal. Then with the help of the diode detector (D6) using these AM signal we get back the original signal.

De Emphasis Circuit

This circuit is used to remove the effect of pre-emphasis and to get back our original modulating signal. This circuit is actually the low pass filter with time period of 50 μS. Hence this circuit will pass the frequencies up to 3.183 KHz as it is and after this it will start attenuating the frequencies by the same amount by which the pre-emphasis circuit has boosted at transmitter side. Thus we get back the original modulating signal.

Low Pass Filter

This is a classic low pass active filter type VCVS (Voltage-Controlled Voltage Source), with cutting frequency of 3400Hz. As the filter is of the 4th order, its slope is 24dB/octave (80dB/decade).

The unwanted DC component is removed and the low-pass filter removes the ripple at the IF frequency. Consequently, the signal at the output closely resembles the original input signal.

Audio Amplifier

The audio amplifier is designed using IC LM386. This circuit has got the total gain of about 46 dB. Volume can be controlled with the help of VOLUME pot provided.

At the output of the amplifier the headphones supplied with the kit can be connected.

SWITCH FAULTS

Switch fault section provides 4 switches each on ACL-FM and ACL-FD.
These switches can be used to simulate fault conditions in various parts of the circuit. The faults are normally used one at a time. To ensure that the ACL kits are fully operational all switches should be set to OFF position before use.

ACL-FM

- Put switch 1 of SF1 in ACL-FM switch fault section to ON position. This will open the capacitor C33 & Resistor R82 in the MIXER circuit. Hence the O/P signal will get disappears.
- Put switch 2 of SF1 in ACL-FM switch fault section to ON position. This will open resistor R49 from the phase modulator and hence no variation in phase is obtained.
- Put switch 3 of SF1 in ACL-FM switch fault section to ON position. This will open the capacitor C24 .So NO modulation will take place.
- Put switch 4 of SF1 in ACL-FM switch fault section to ON position. This will open resistor R58 in local oscillator so there will not be variation in frequency signal.

ACL-FD

- Put switch 1 of SF1 in ACL-FD switch fault section to ON position. This will open resistor R3 in limiter section. Due to this limiter action is disabled & the output of limiter will contain the amplitude variations.
- Put switch 2 of SF1 in ACL-FD switch fault section to ON position. This will open the pin 4 of U2 (MC 1496) in quadrature detector section , this will disturb the output of the detector.
- Put switch 3 of SF1 in ACL-FD switch fault section to ON position. This will open the resistor R27 connected to pin 11 of U4 (4046). This changes the center frequency of PLL and thus no output is obtained.
- Put switch 4 of SF1 in ACL-FD switch fault section to ON position. This will open the capacitor C19 in low pass filter thus the output will contain noise.

CIRCUIT DIAGRAM
ACL-FM

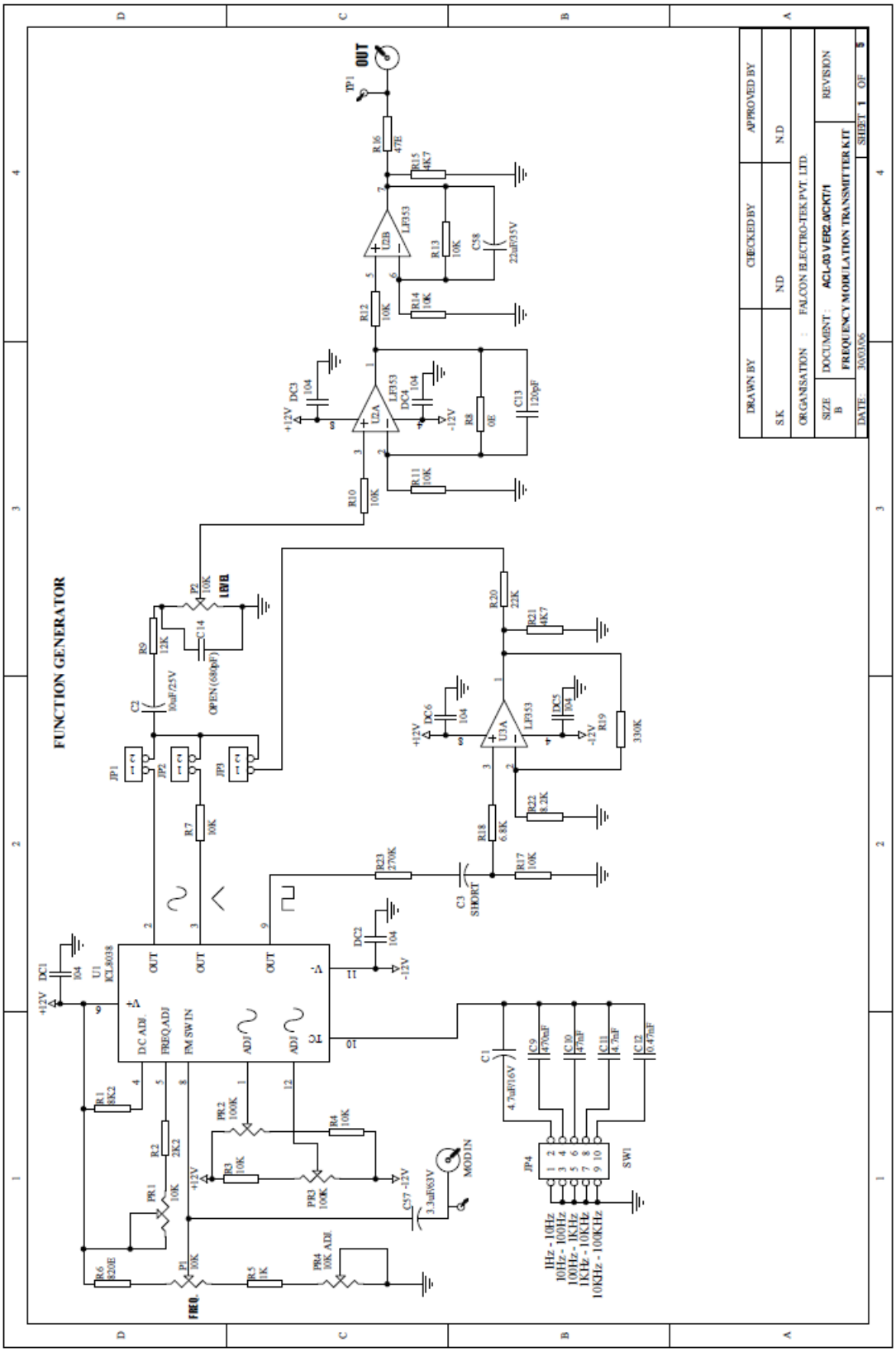

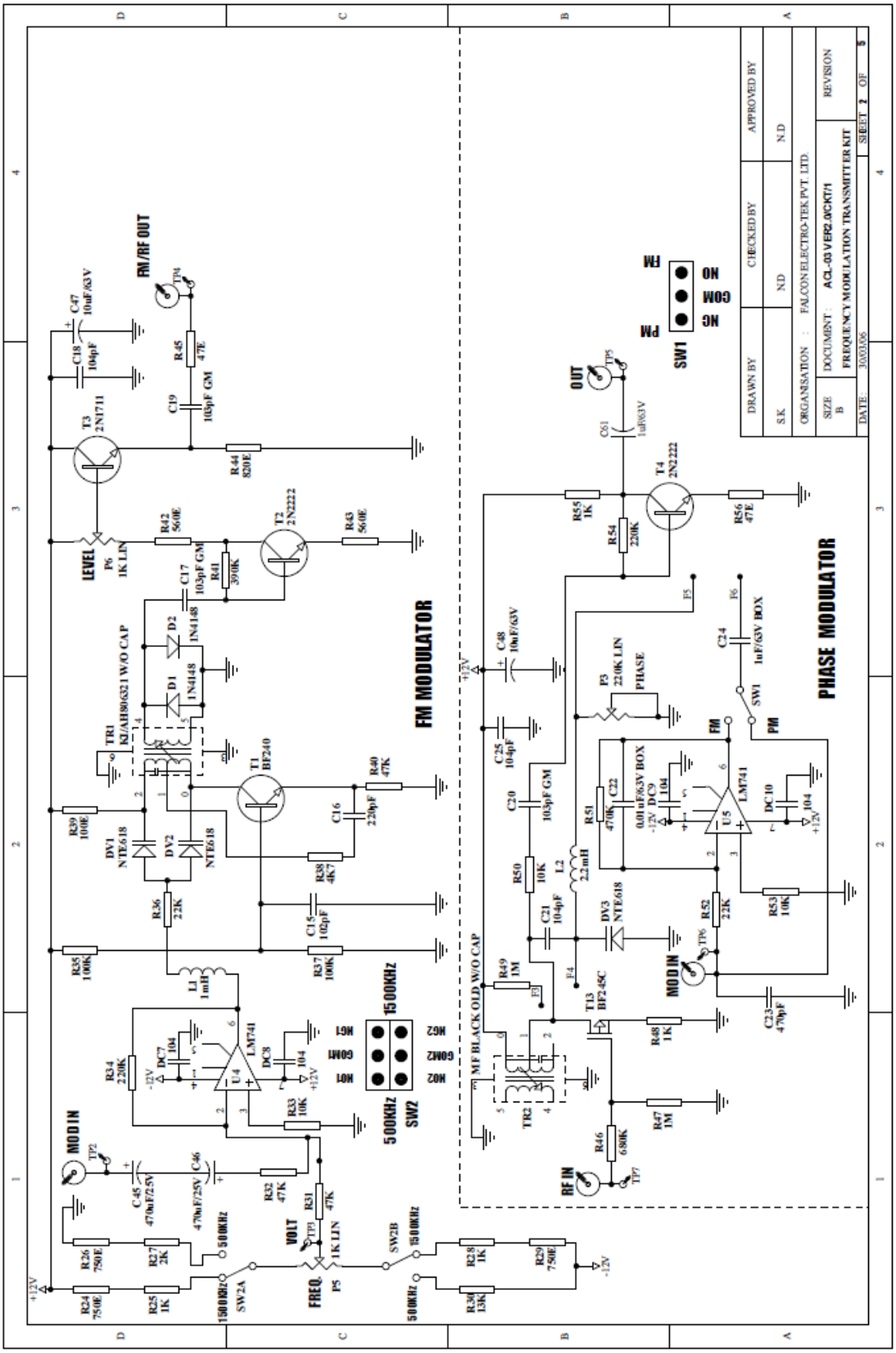
FM MODULATOR
PHASE MODULATOR
FM/RF OUT
OUT
MODIN
RF IN
LEVEL
FREQ.
VOLT
SW1
SW2
1500KHz
500KHz
ORGANISATION : FALCON ELECTRO-TEK PVT. LTD.
DOCUMENT : ACL-03 VER2.0/CKT/1
FREQUENCY MODULATION TRANSMITTER KIT
DRAWN BY
CHECKED BY
APPROVED BY
REVISION
SIZE B
DATE 30/03/06
SHEET 2 OF 5

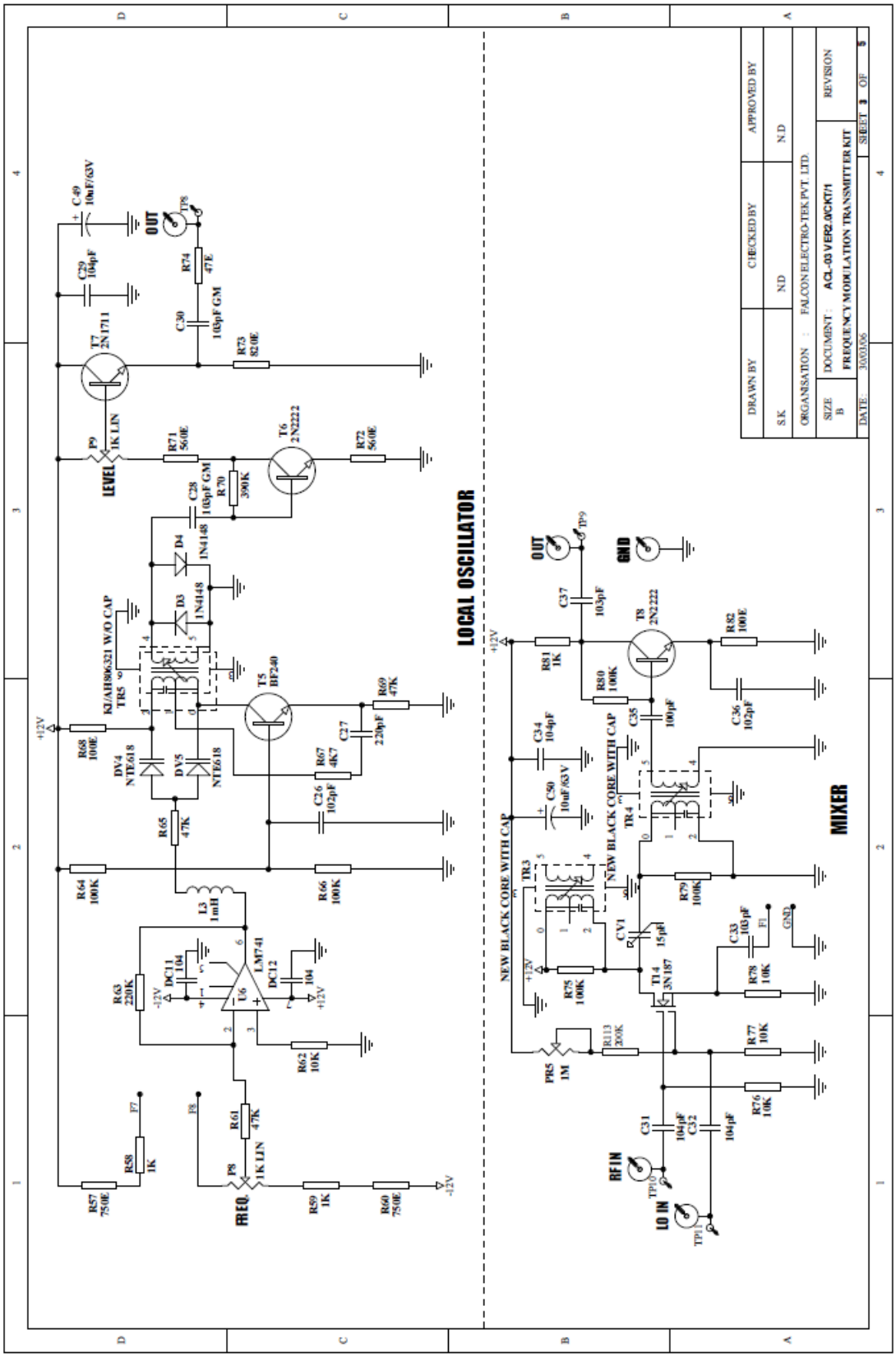
LOCAL OSCILLATOR
MIXER
OUT
GND
RFIN
LO IN
LEVEL
FREQ.
DRAWN BY
S.K
CHECKED BY
N.D
APPROVED BY
N.D
ORGANISATION : FALCON ELECTRO-TEK PVT. LTD.
SIZE B
DOCUMENT : ACL-03 VER2.0CKT/1
FREQUENCY MODULATION TRANSMITTER KIT
REVISION
DATE: 30/03/06
SHEET 3 OF 5

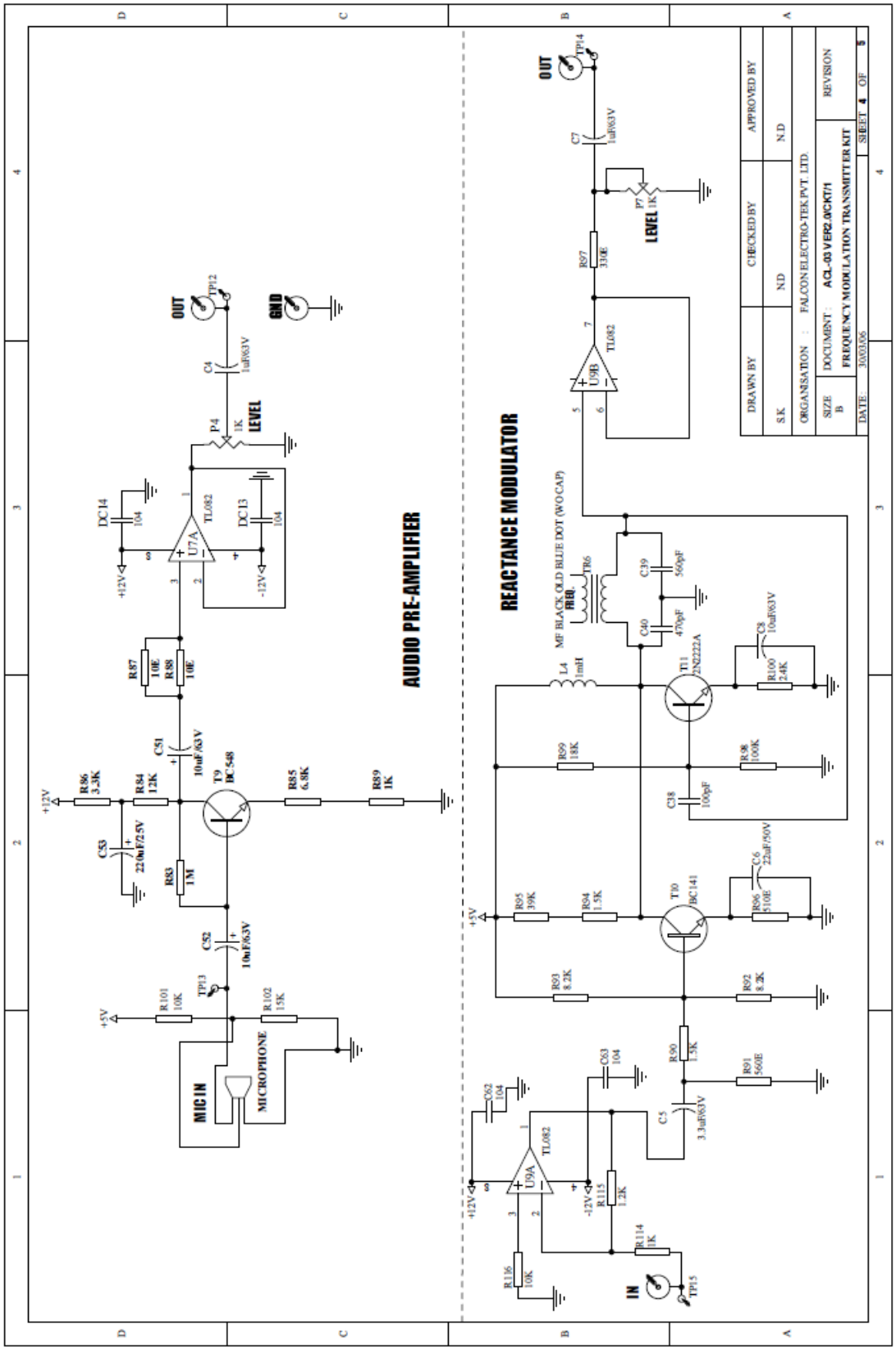
AUDIO PRE-AMPLIFIER
REACTANCE MODULATOR
MIC IN
MICROPHONE
OUT
GND
LEVEL
IN
DRAWN BY
S.K
CHECKED BY
N.D
APPROVED BY
N.D
ORGANISATION : FALCON ELECTRO-TEK PVT. LTD.
DOCUMENT : ACL-03 VER2.0/CKT/1
FREQUENCY MODULATION TRANSMITTER KIT
REVISION
SIZE B
DATE: 30/03/06
SHEET 4 OF 5

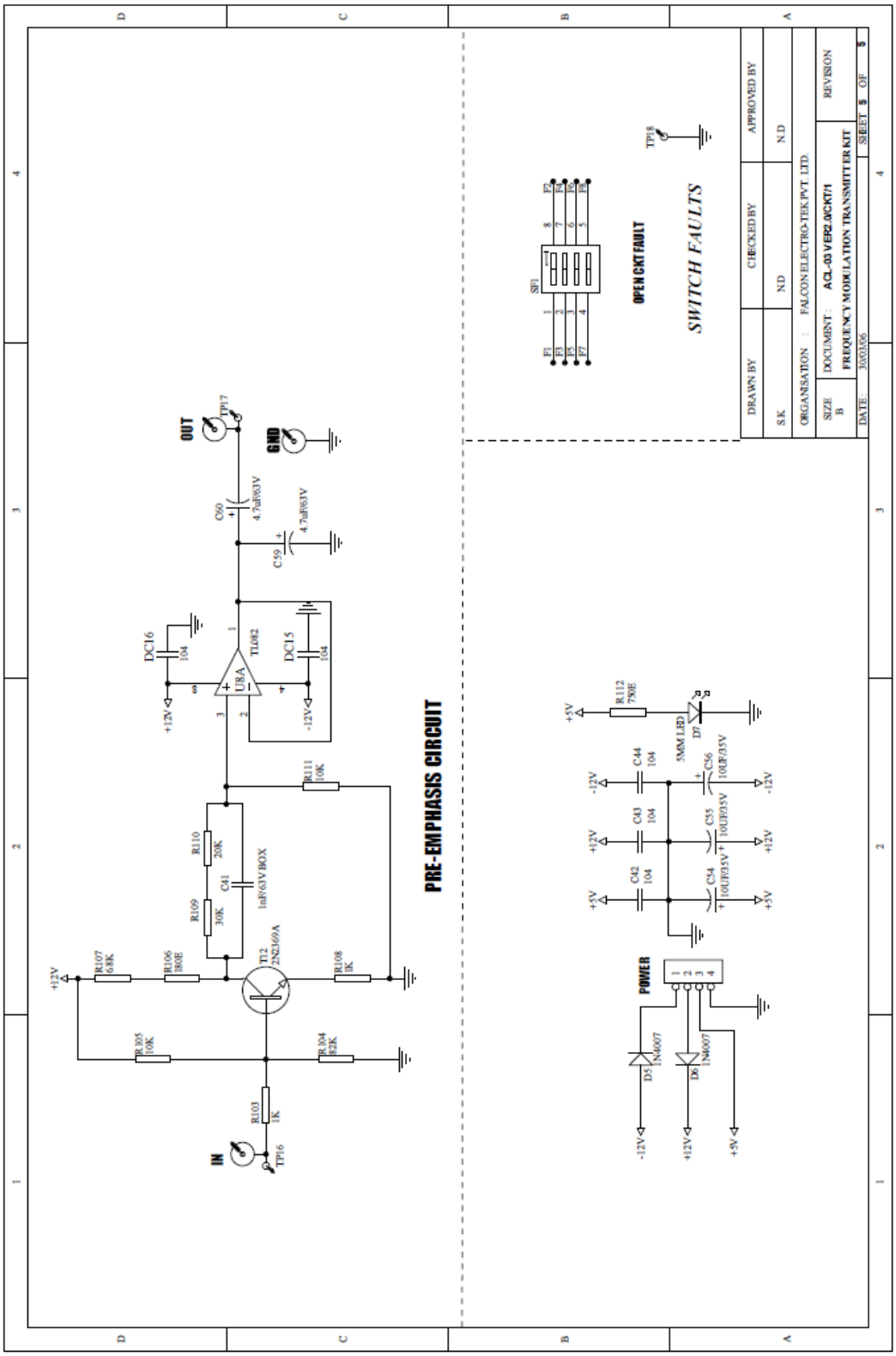
PRE-EMPHASIS CIRCUIT
IN
OUT
GND
TP16
TP17
R103 1K
R104 82K
R105 10K
R106 180E
R107 68K
R108 1K
R109 30K
R110 20K
R111 10K
C41 1nF/63V BOX
T12 2N2369A
U8A TL082
DC15 104
DC16 104
C59 4.7uF/63V
C60 4.7uF/63V
+12V
-12V
POWER
D5 1N4007
D6 1N4007
C42 104
C43 104
C44 104
C54 10UF/35V
C55 10UF/35V
C56 10UF/35V
5MM LED
D7
R112 750E
+5V
SW1
F1
F2
F3
F4
F5
F6
F7
F8
OPEN CKT FAULT
TP18
SWITCH FAULTS
DRAWN BY
S.K
CHECKED BY
N.D
APPROVED BY
N.D
ORGANISATION : FALCON ELECTRO-TEK PVT. LTD.
SIZE B
DOCUMENT : ACL-03 VER2.0/CKT/1
FREQUENCY MODULATION TRANSMITTER KIT
REVISION
DATE: 30/03/06
SHEET 5 OF 5

ACL-FD

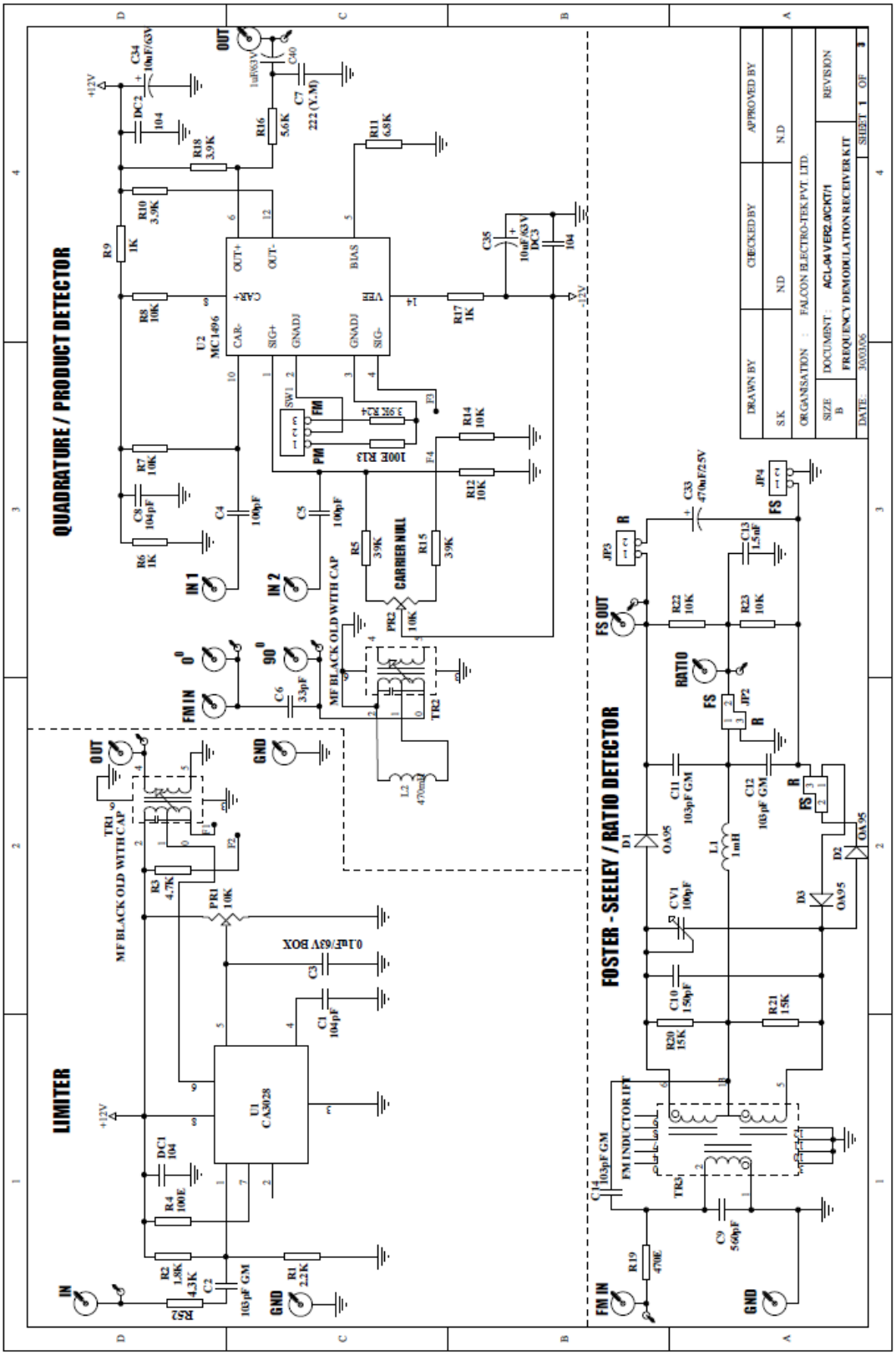
QUADRATURE / PRODUCT DETECTOR
LIMITER
FOSTER - SEELEY / RATIO DETECTOR
U2 MC1496
U1 CA3028
CARRIER NULL
MF BLACK OLD WITH CAP
FM INDUCTOR IFT
DRAWN BY
CHECKED BY
APPROVED BY
ORGANISATION : FALCON ELECTRO-TEK PVT. LTD.
DOCUMENT : ACL-04 VER2.0/CKT/1
FREQUENCY DEMODULATION RECEIVER KIT
REVISION
SHEET 1 OF 3

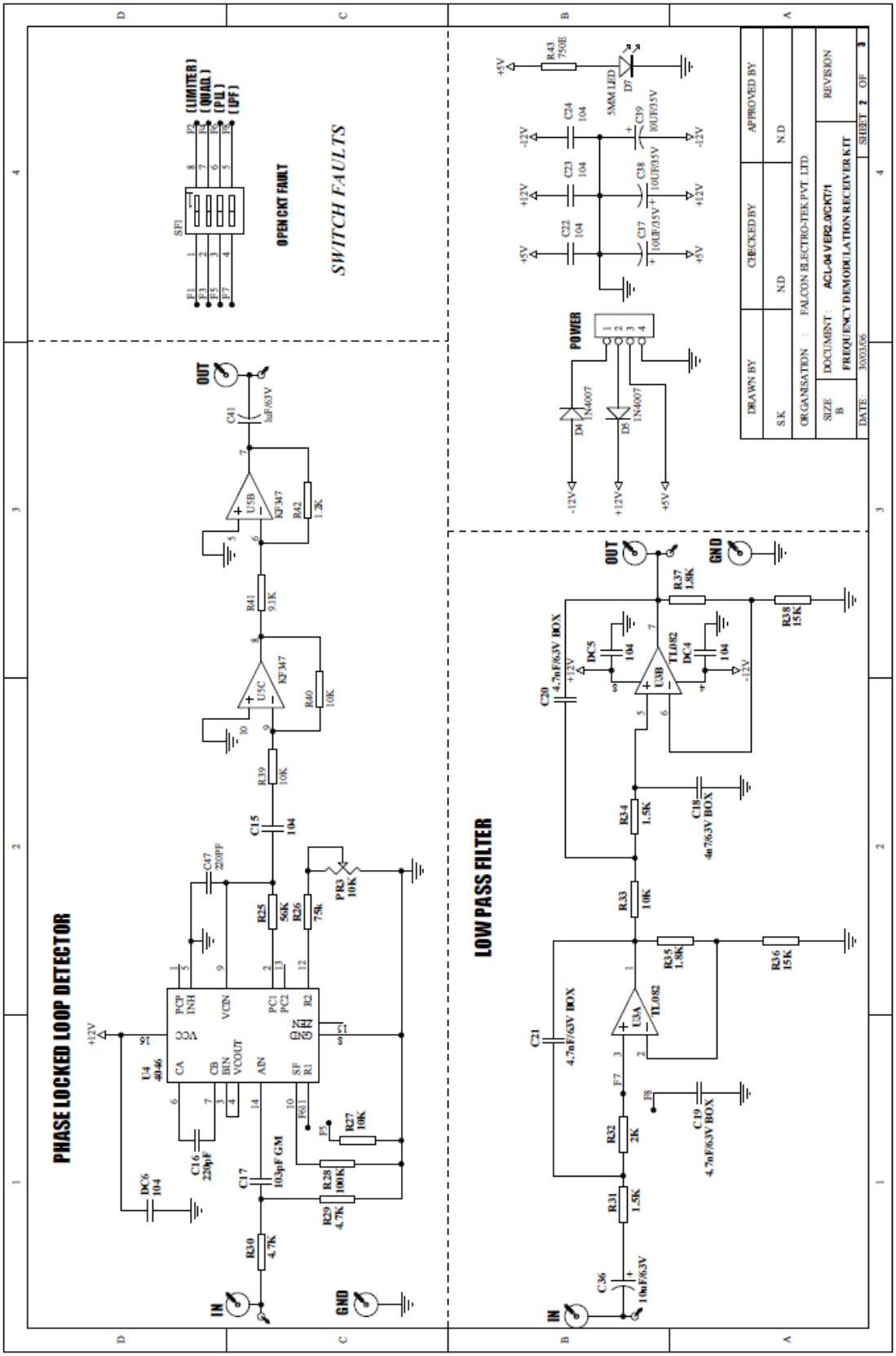
PHASE LOCKED LOOP DETECTOR
LOW PASS FILTER
POWER
OPEN CKT FAULT
SWITCH FAULTS
(LIMITER)
(QUAD.)
(PLL)
(LPF)
IN
OUT
GND
U4 4046
U5B KF347
U5C KF347
U3A TL082
U3B TL082
DRAWN BY S.K
CHECKED BY N.D
APPROVED BY N.D
ORGANISATION : FALCON ELECTRO-TEK PVT. LTD.
DOCUMENT : ACL-04 VER2.0CKT/1
FREQUENCY DEMODULATION RECEIVER KIT
SIZE B
DATE: 30/03/06
REVISION
SHEET 2 OF 3

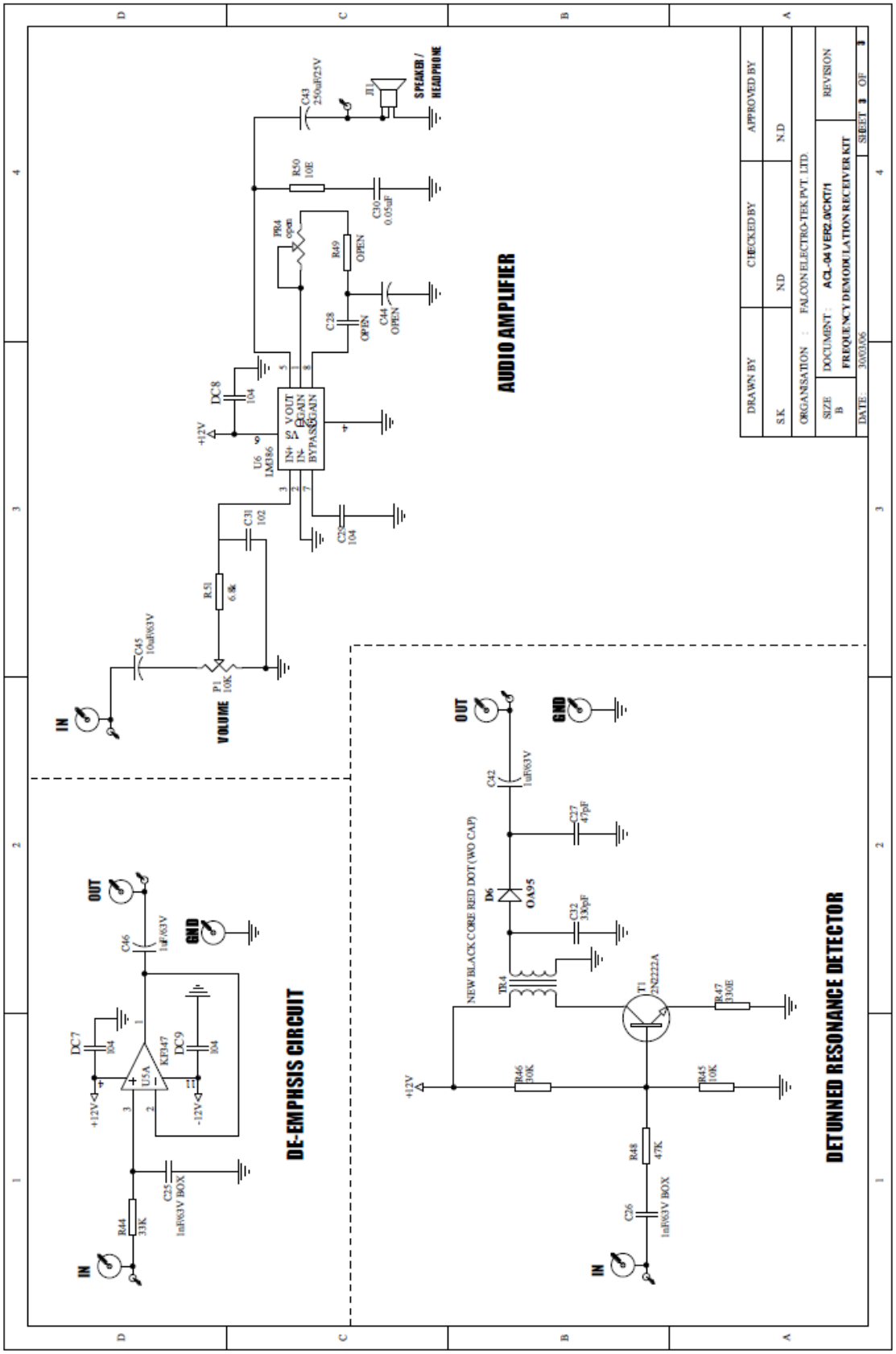
AUDIO AMPLIFIER
VOLUME
DE-EMPHSIS CIRCUIT
DETUNNED RESONANCE DETECTOR
SPEAKER / HEADPHONE
IN
OUT
GND
DRAWN BY
S.K
CHECKED BY
N.D
APPROVED BY
N.D
ORGANISATION : FALCON ELECTRO-TEK PVT. LTD.
DOCUMENT : ACL-04 VER2.0/CKT/1
FREQUENCY DEMODULATION RECEIVER KIT
SIZE B
DATE 30/03/06
REVISION
SHEET 3 OF 3

EXPERIMENT NO.1

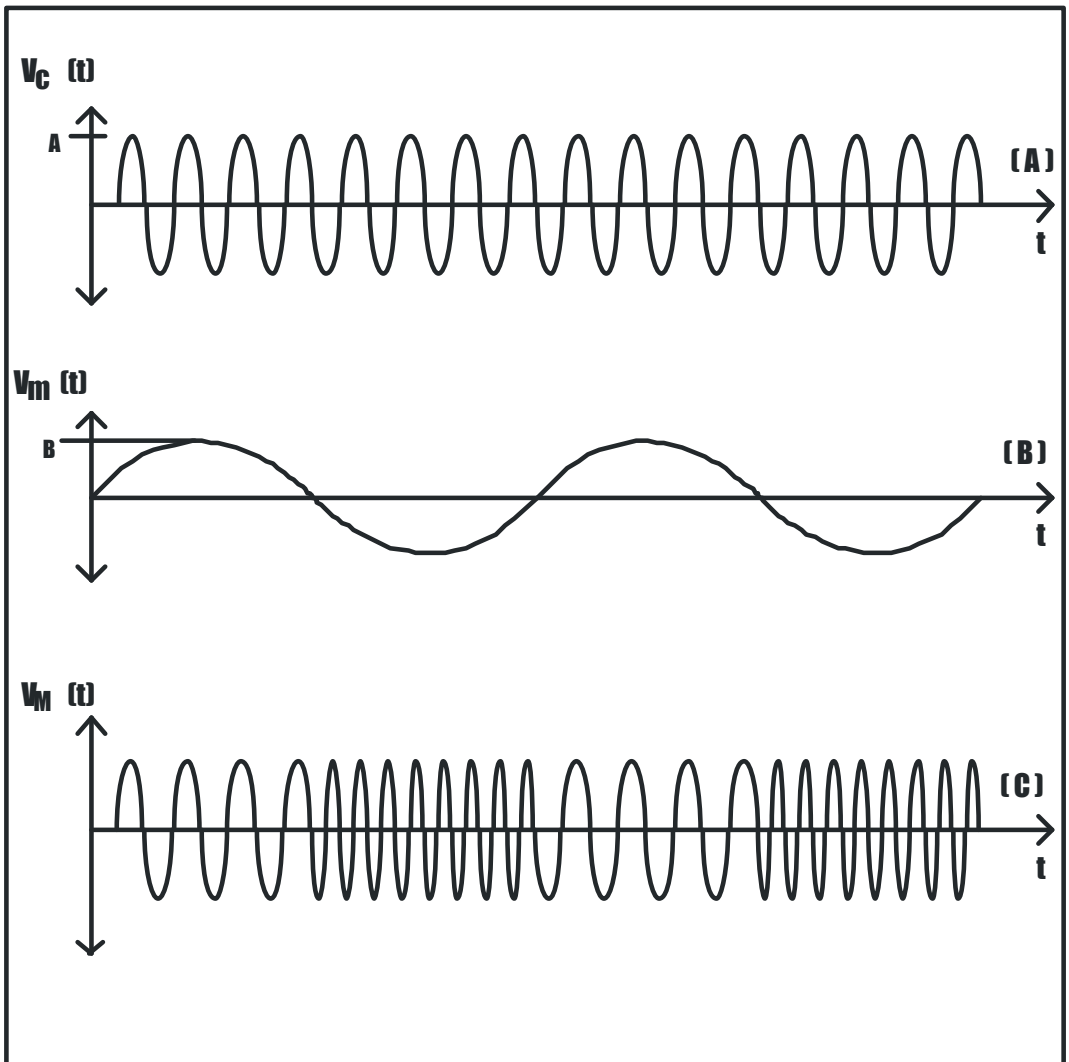

FIG. 1.1. A) CARRIER SIGNAL B) MODULATING SIGNAL C) MODULATED SIGNAL

EXPERIMENT NO: 1

NAME:-

Study of Frequency Modulation

OBJECTIVE:-

A. To plot the modulation characteristic of varactor modulator.
B. To calculate the modulation sensitivity of varactor modulator.
C. To observe and measure frequency deviation and modulation index of FM.
D. To study frequency modulation using reactance modulator and measure the frequency deviation.

THEORY:-

1.1 Frequency Modulation

It is a type of modulation in which the frequency of the high frequency (Carrier) is varied in accordance with the instantaneous value of the modulating signal.

1.2 Main Aspects

Consider a sine wave signal $v_m(t)$ with pulse w (FIG. 1.1):

$$v_m(t) = B \cdot \sin(w \cdot t)$$

and another sine wave $v_c(t)$ with upper Ω pulse:

$$v_c(t) = A \cdot \sin(\Omega \cdot t)$$

The signal $v_m(t)$ is called modulating signal, the signal $v_c(t)$ is called carrier signal.
Vary the frequency of the carrier $v_c(t)$ in a way proportional to the amplitude of the modulating signal $v_m(t)$. You obtain a $v_m(t)$ frequency modulated diagonal, which can be expressed by the relation:

$$v_m(t) = A \cdot \sin[\theta(t)]$$

with $\theta(t)$ instantaneous angle function of $v_m(t)$.

1.3 Mathematical Expression Of The Frequency Modulated Signal

The instantaneous pulse $\Omega(t)$ of the FM signal by definition:

$$\Omega(t) = \Omega + K \cdot v_m(t)$$

with Ω = carrier pulse
K= modulation sensitivity

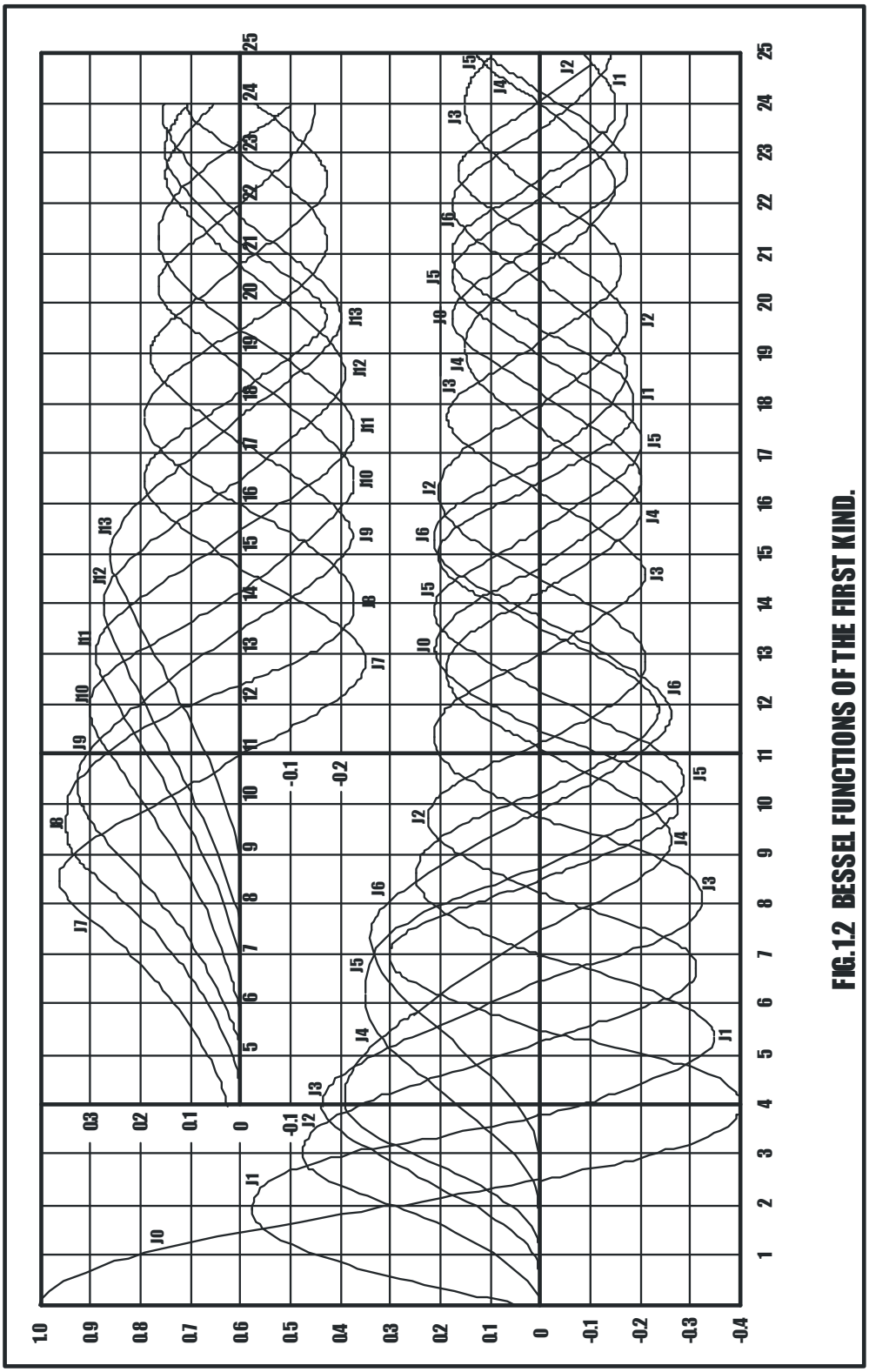

FIG.1.2 BESSEL FUNCTIONS OF THE FIRST KIND.

The instantaneous angle Ω (t) to be used as subject of the sine to obtain the mathematical operation of the FM signal, is detected by integrating Ω (t):

$$\theta(t) = \int \Omega(t)\, dt$$

In the case of modulating sine wave signal [$v_m(t) = B.\sin(w.t)$], θ (t) it results:

$$\theta(t) = \Omega \bullet (t) - (K \bullet B/w) \bullet \cos(w \bullet t)$$

The expression of the frequency modulated signal $v_m(t)$ becomes:

$$v_m(t) = A \bullet \sin[\Omega \bullet (t) - (K \bullet B/w) \bullet \cos(w \bullet t)]$$

1.4 Frequency Deviation ΔF And Modulation Index M_F

The instantaneous frequency F(t) of the carrier modulated by a sine wave, results:

$$F(t) = \frac{\Omega(t)}{2\pi} = \frac{\Omega}{2\pi} + K \bullet B \bullet \sin(w \bullet t)$$

and oscillates between a minimum $F_{min}$and a maximum value F_{max}:

$$F_{min} = \frac{\Omega}{2\pi} - \frac{K \bullet B}{2\pi} \qquad F_{max} = \frac{\Omega}{2\pi} + \frac{K \bullet B}{2\pi}$$

The frequency deviation ΔF represents the maximum shift between the modulated signal frequency, over and under the frequency of the carrier:

$$\Delta F = \frac{F_{max} - F_{min}}{2}$$

We define as modulation index m_f the ratio between ΔF and the modulating frequency f:

$$m_f = \frac{\Delta F}{f}$$

1.5 Frequency Modulation Generation

The circuits used to generate a frequency modulation must vary the frequency of a high frequency signal (carrier) as function of the amplitude of a low frequency signal (modulating signal). In practice there are two main methods used to generate the FM:

1.5.1 Direct Method

An oscilloscope is used in which the reactance of one of the elements of the resonant circuit depends on the modulating voltage. The most common device with variable reactance is the Varactor or Varicap, which is a particular diode which capacity varies as function of the reverse bias voltage (the Varicap is described in the next chapter).The frequency of the carrier is established with AFC circuits (Automatic Frequency Control) or PLL (Phase Locked Loop).

1.5.2 Indirect Method

The FM is obtained in this case by a Phase Modulation, after the modulating signal has been integrated. In the phase modulator the carrier can be generated by a quartz oscillator, and so its frequency stabilization is easier.

In the circuit used for the exercise, the frequency modulation is generated by a Hartley oscillator, which frequency is determined by a fixed inductance and by a capacity (variable) supplied by Varicap diodes.

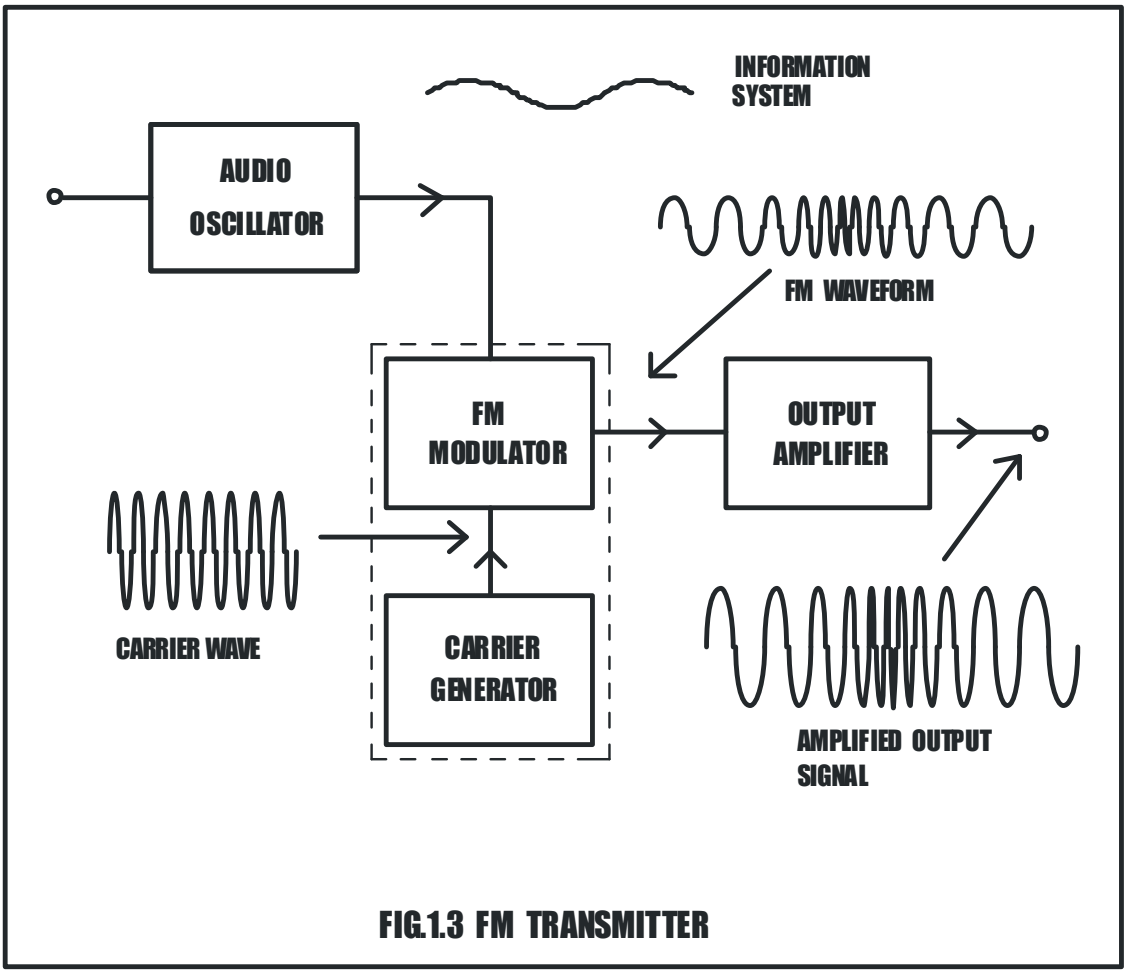

FIG.1.3 FM TRANSMITTER

1.6 The Advantages OfFM

There are three advantages of frequency modulation for a communication system.

- We saw that the information signal controlled the frequency of the carrier but had no effect on its amplitude. Now, when any transmission is affected by electrical noise, the noise signal is superimposed on the transmitted signal. In an AM system, the demodulator is designed to respond to changes in amplitude of the received signal but in an FM receiver the demodulator is only watching for changes in frequency and therefore ignores any changes in amplitude. Electrical noise thus has little or no effect on an FM communication system.
- The bandwidth of the FM signal is very wide compared with an AM transmission. Typical broadcast bandwidths are in the order of 250kHz. This allows a much better sound quality, so signals like music sound significantly better if frequency modulation is being used.
- When an FM demodulator is receiving an FM signal, it follows the variations in Frequency of the incoming signal and is said to ‘lock on’ to the received transmission. This has a great advantage when two transmissions are received at

the same time. The receiver 'locks on' to the stronger of the two signals and ignores the other. This is called the 'captured effect' and it means that we can listen to an FM station on a radio without interference from other stations.

1.7 The Disadvantage of FM

This is the wide bandwidth of the transmission.
The medium frequency broadcast band extends from about 550KHz to 1,600KHz, and is therefore only a little over 1MHz in width. If we tried to use FM using a bandwidth of 250KHz for each station, it would mean that no more than four stations could be accommodated. This wide bandwidth forces us to use higher carrier frequencies, usually in the VHF band, which extends from about 85MHz to 110MHz. This is a width of 25MHz and would hold many more stations.

1.8 The Bandwidth Of An FM Signal

The frequency modulation process generates a large number of side frequencies. Theoretically, the sidebands are infinitely wide with the power levels becoming lower and lower as we move away from the carrier frequency. The bandwidth of 250kHz was chosen as a convenient value to ensure a low value of distortion in the received signal while allowing many stations to be accommodated in the VHF broadcast band.
Communication signals, which do not require the high quality, associated with broadcast stations can adopt a narrower bandwidth to enable more transmissions within their allotted frequency band. Marine communications for ship to shop communications, for example, use a bandwidth of only 25kHz but this is only for speech and the quality is not important.
These bandwidth figures bear no easy relationship with the frequency of the information signal or with the frequency deviation or, it seems, anything else. FM is unlike AM in this respect.

1.9 An FM Transmitter

The audio oscillator supplies the information signal and could, if we wish, be replaced by a microphone and AF amplifier to provide speech and music instead of the sine wave signals that we are using with ACL-FM.
The FM modulator is used to combine the carrier wave and the information signal in much the same way as in the AM transmitter. The only difference in this case is that
the generation of the carrier wave and the modulation process is carried out in the same block. It doesn't have to be, but in our case, it is.
The only real difference between the AM and FM transmitters are the modulators, so we are only going to consider this part of the transmitter.
We are going to investigate three types of modulator, they are called the VARACTOR MODULATOR, REACTANCE MODULATOR and the FM is obtained in this case by a Phase Modulation.

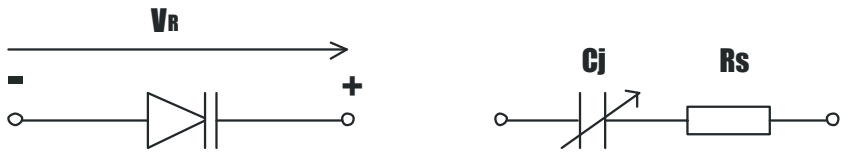

FIG 1.4 SYMBOL & EQUIVALENT CIRCUIT OF VARICAP DIODE

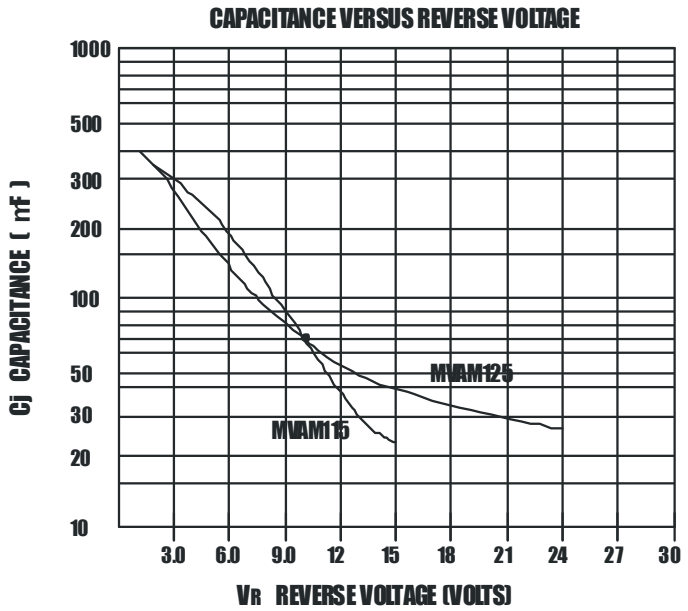

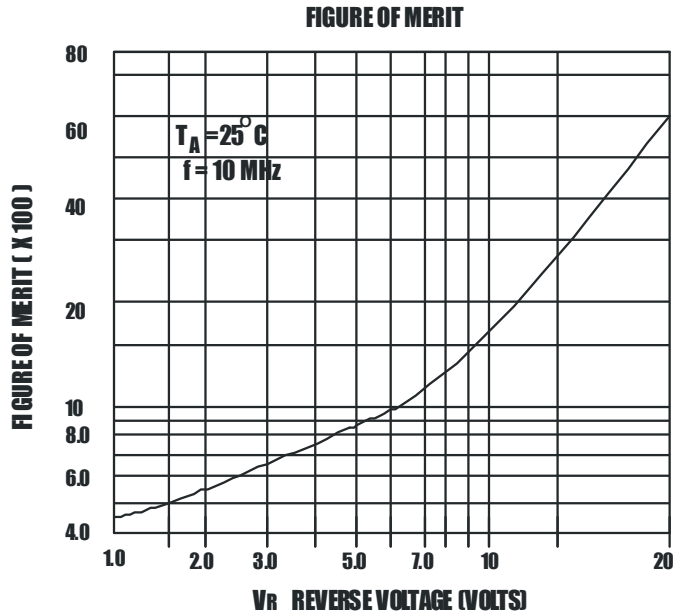

FIG. 1.5 CHARACTERISTIC CURVES OF THE VARICAP DIODE

1.10 The Varicap Diode

The Varicap (or Varactor) is a diode which terminals are supplied with a capacity depending on the applied reverse voltage. The symbol and the equivalent circuit of the Varicap diode are shown in FIG. 1.4, where:

- Cj = junction capacity
- Rs= series resistance (it drops as the applied reverse voltage increase

The junction capacity Cj depends on the reverse voltage V_R applied to the diode, according to the relation:

$$C_j = C_0 \left(1+\frac{V_R}{V_D}\right)^{\eta}$$

where:
VR = reverse voltage applied to Varicap
C0 = junction capacity for VR=0
VD = junction potential (0.6 V in the silicon diodes)
η = it depends on the manufacturing process; it ranges between 0.3 and 0.6 approx.

The factor of merit *Q* of the **diode is expressed by: $Q = 1/(w \cdot C_j \cdot R_s)$.**
FIG. 1.5 shows the "capacity/ V_R" and "merit factor/ V_R" curves of the Varicap diode used in the FM modulator.

A. To Plot The Modulation Characteristic Of Varactor Modulator.

EQUIPMENTS:-

- ACL-FM Kit.
- Power supply.
- Oscilloscope.
- Volt meter.
- Frequency meter.
- Connecting Links.

NOTE: keep all the switch faults in off position.

PROCEDURE:-

The characteristic modulation curve is given by the output frequency of the modulator as function of the input modulating voltage (FIG. 1.6). It is possible to plot the curve of FIG. 1.6 post by post, using a potentiometer to statically vary amplitude of the modulating signal, and measuring the corresponding output frequency of the modulator this is done using following procedure.

- Connect the power supply with proper polarity to the kit ACL-FM. While connecting this, ensure that the power supply is OFF.
- Switch ON the power supply and Carry out the following presetting as shown in FIG. 1.9.

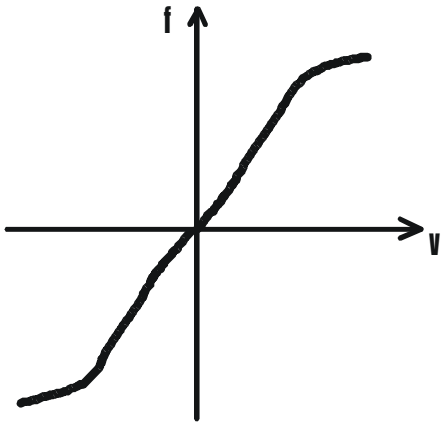

FIG. 1.6

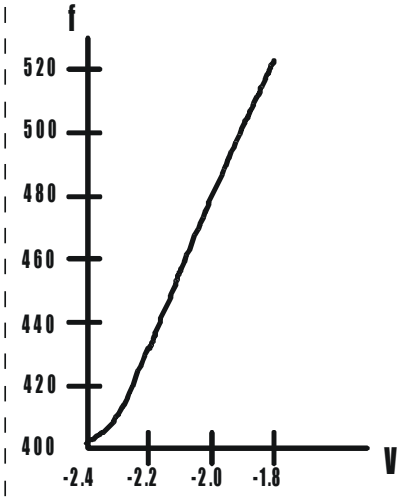

VOLTAGE [V]	FREQUENCY [KHz]
- 2.4	
- 2.3	
- 2.2	
- 2.1	
- 2.0	
- 1.9	
- 1.8	

FIG. 1.7

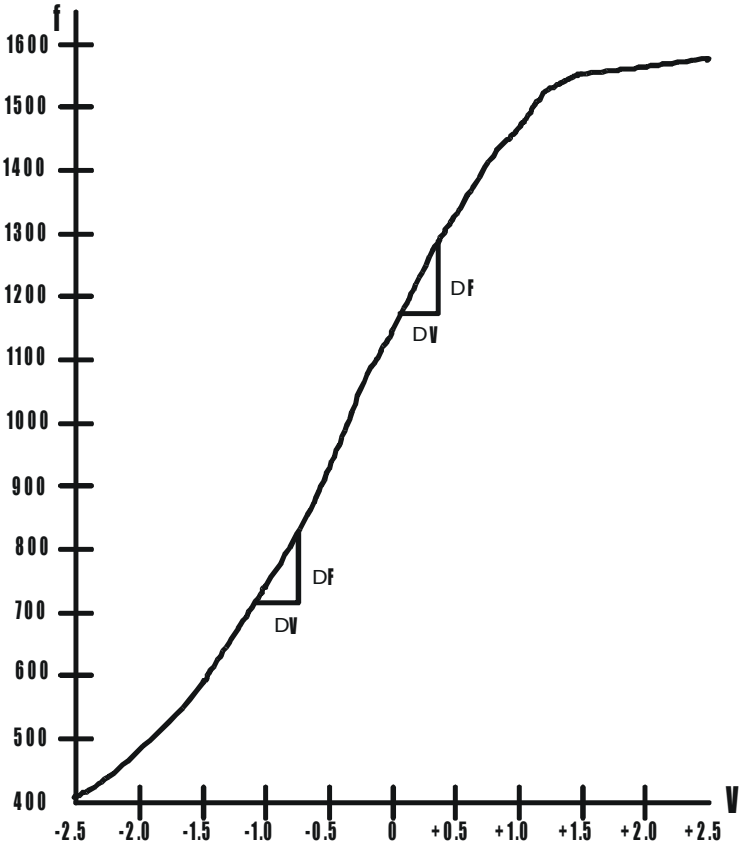

VOLTAGE [V]	FREQUENCY [KHz]
- 2.8	
- 2.5	
- 2.0	
- 1.5	
- 1.0	
- 0.5	
0	
0.5	
1.0	
1.5	
2.0	
2.5	

FIG. 1.8 MODULATION CHARACTERISTIC

FREQUENCY MODULATOR: LEVEL about 2Vpp; FREQ**.** to the minimum; switch on 1500KHz Connect the oscilloscope and frequency meter to the output of the modulator **FM/RF OUT**.

- Connect the voltmeter to the cursor of the frequency regulation potentiometer post **V** below SW2.
- Vary the voltage in steps of 0.5 Volt and fill a table with the voltage values and the corresponding frequencies.
- Plot a graph with the measured voltage and frequency values. You obtain a curve similar to the one of FIG. 1.8.
- From the analysis of the curve you can note that some segments have not a linear behavior, while if you consider the whole characteristic you find a high non-linearity.

B. To Calculate the Modulation Sensitivity of Varactor Modulator

EQUIPMENTS:-

- ACL-FM Kit.
- Power supply.
- 20MHz oscilloscope.
- Voltmeter.
- Frequency meter.
- Connecting Links.

NOTE: keep all the switch faults in off position.

PROCEDURE:-

- Connect the power supply with proper polarity to the kit ACL-FM. While connecting this, ensure that the power supply is OFF.
- Switch ON the power supply and Carry out the following presetting as shown in FIG. 1.9.
  - **FREQUENCY MODULATOR:** LEVEL about 2Vpp; FREQ**.** to the minimum; switch on 1500KHz.
- Consider the modulator operation in the segment of curve within 700 to 1300 KHz. From the analysis of the curve of FIG. 1.8 it is possible to calculate the modulation sensitivity of the modulator.
- The modulation sensitivity S is defined as:

$$S = \frac{dF(v)}{dv}$$

- Where F(v) is the instantaneous frequency function of the modulating voltage v. The last relation can be approximated writing the incremental ratio:

$$S = \frac{\Delta F}{\Delta v}$$

- with reference to the curve of FIG. 1.8,
  $\Delta F = 50kHz$ $v \approx 125$ mV from which: So = 50/125 = 0.4 KHz/ mv.

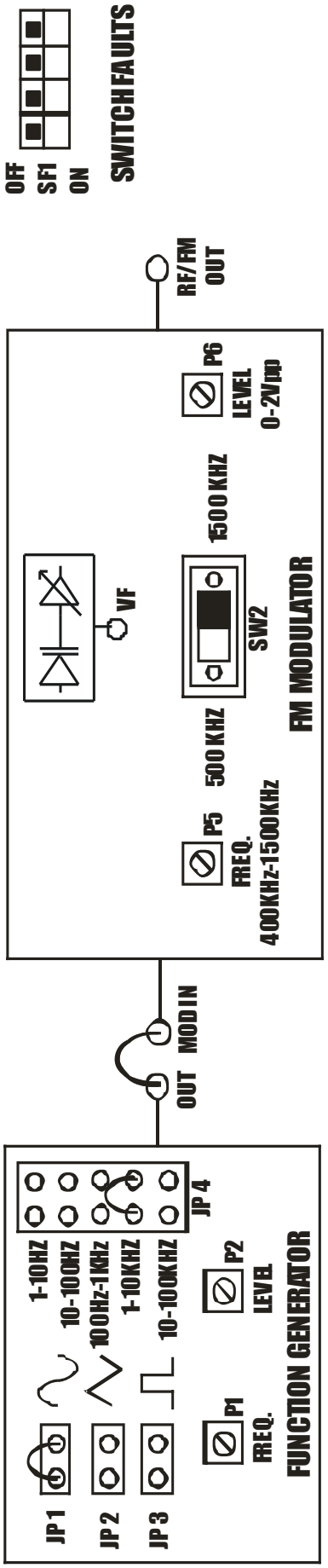

FIG. 1.9 BLOCK DIAGRAM FOR STUDY OF VARACTOR MODULATOR

C. To Observe And Measure Frequency Deviation And Modulation Index of FM.

EQUIPMENTS:-

- Modules ACL-FM.
- Power Supply.
- Oscilloscope.
- Volt meter.
- Frequency meter.
- Connecting Links.
- Function Generator

NOTE: keep all the switch faults in off position

PROCEDURE:-

- Refer to the FIG.1.9 & Carry out the following connections.
- Connect the power supply with proper polarity to the kit ACL-FM while connecting this; ensure that the power supply is OFF.
- Connect the o/p of function generator **OUT** post to the modulation **IN** of FREQUENCYMODULATOR **MOD IN** post.
- Switch ON the power supply and Carry out the following presetting:
  - **FUNCTION GENERATOR**: sine wave (JP1); LEVEL about 100mV; FREQ**.** about 1KHz.
  - **FREQUENCY MODULATOR**LEVEL about 2Vpp; FREQ**.** on the center; switch on 1500KHz.
- Connect the oscilloscope to the output of the modulator FM/RF OUT. You obtain a waveform similar to the one of FIG. 1.10.
- The frequency deviation Δ F can be calculated as follows (refer to FIG. 1.11):
  - From the oscilloscope evaluate F_M and F_m, detecting the periods of the respective sine waves
  - The frequency deviation ΔF is defined as: $\Delta F = (F_M - F_m)/2$

  You can note that if the modulator operates in a linear zone so F_M and F_m are over and under the central frequency F of the same quantity ΔF, otherwise this does not occur.
- The value of the modulation index m_f is calculated by the relation

  $m_f = \Delta F/f$, where f is the frequency of the modulating signal.
- Then observe the FM signal as shown in FIG. 1.10.
- To observe the FM at lower frequencies apply Sine wave of 1KHz and 1Vpp from external function generator to **MOD IN** post of onboard Function Generator and keep JP4 at 10-100KHz position and adjust the frequency at about 20-25KHz and output level of Function generator at 2Vpp.

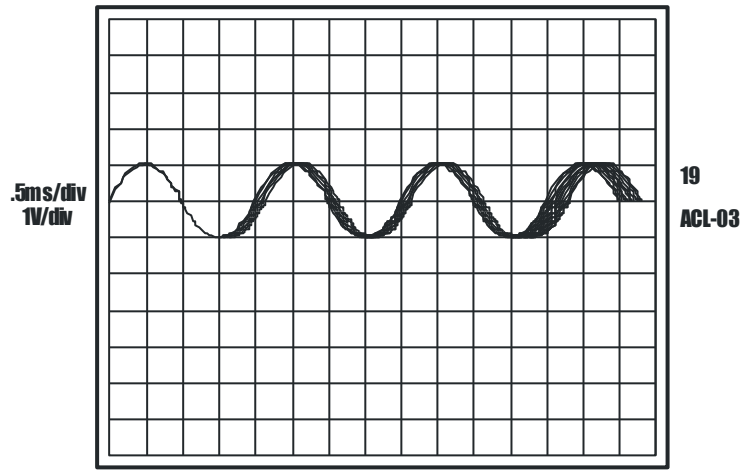

FIG 1.10

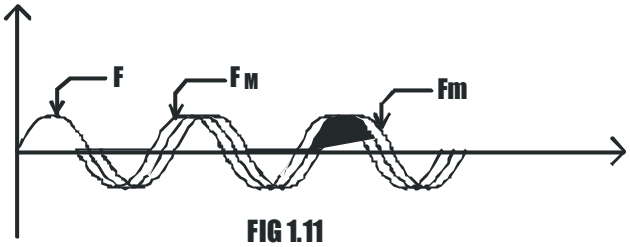

FIG 1.11

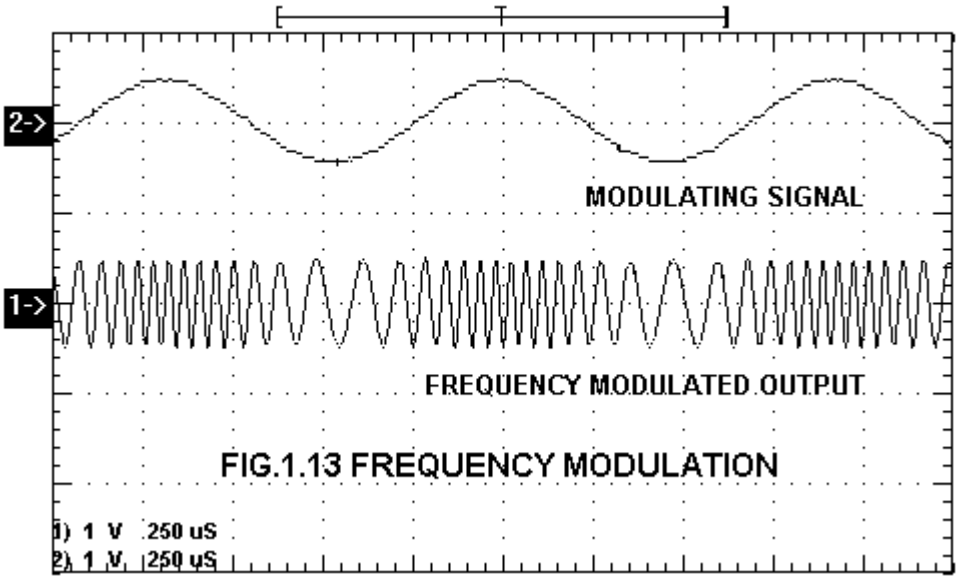

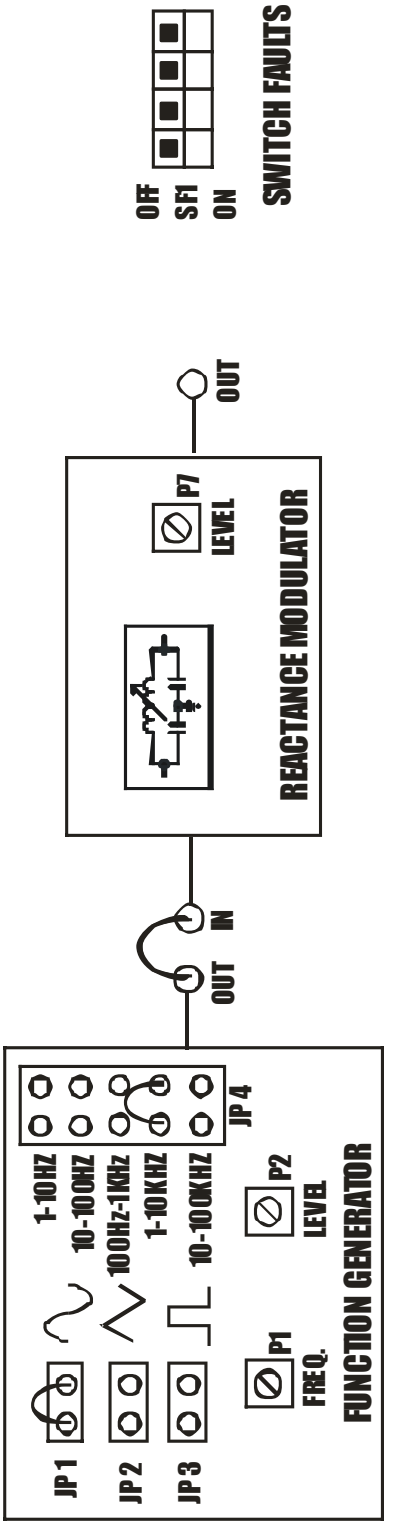

FIG. 1.12 BLOCK DIAGRAM FOR STUDY OF REACTANCE MODULATOR

Reactance Modulator

The basic idea of operation of the modulator is:

The modulator contains an RF oscillator to generate the carrier and the oscillator employs a parallel tuned circuit to determine the frequency of operation.

Adding an additional capacitor in parallel will cause the total capacitance to increase, which will cause to decrease the resonance frequency.

The tuned circuit is used in the oscillator that generates the carrier signal so when the capacitance changes the carrier frequency also changes.

To produce a frequency modulated carrier all we have to do is to find a way of making the information signal increase and decrease the size of the capacitance and hence control the carrier frequency.

The operation of the reactance modulator can be well understood from the block diagram below:

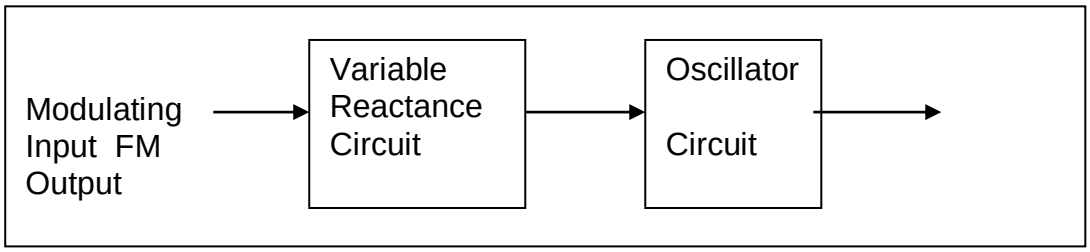

As shown in circuit diagram the variable reactance circuit is basically the transistorized CE amplifier. When the modulating signal is applied to the base of transistor Q, the emitter to base bias varies at the modulation rate. This causes to change the collector voltage at the same modulation rate. When the collector voltage increases, output capacitance C_{CE} decreases; when the collector voltage decreases, C_{CE} increases. An increase in collector voltage has the effect of spreading the plates of C_{CE} apart by increasing the width of the barrier. A decrease of collector voltage reduces the width of the P-N junction and has the same effect as pushing the capacitor plates together to provide more capacitance. When the output capacitance decreases, the instantaneous frequency of oscillator circuit increases. When the output capacitance increases instantaneous frequency of the oscillator circuit decreases Thus we can say that the transistorized circuit acts as a variable capacitor for the oscillator circuit whose capacitance varies with the change in the amplitude of the modulating signal.

Thus the frequency of the oscillator circuit increases and decreases at an audio frequency modulating rate. The output of oscillator is therefore the frequency modulated signal. The frequency deviation in this case depends upon the variation in the output capacitance of the transistor; more the variation in the capacitance more will be the frequency deviation.

D) To Study the Frequency Modulation Using The Reactance Modulator and Measure the Frequency Deviation

EQUIPMENTS:-

- ACL-FM Kit
- Power supply
- Oscilloscope
- Frequency meter
- Connecting links

NOTE: keep all the switch faults in off position

PROCEDURE:-

- Refer the block diagram Fig.1.12 and carry out the connections as per the block diagram.
- Connect the power supply with proper polarity to the kit ACL-FM while connecting this; ensure that the power supply is OFF.
- Connect the o/p of function generator **OUT** post to the modulation **IN** of REACTANCE **MODULATOR IN** post.
- Switch ON the power supply and Carry out the following presetting:
  - **FUNCTION GENERATOR**: sine wave (JP1); LEVEL about 0.1Vpp; FREQ**.** about 1KHz.
  - **REACTANCE MODULATOR** Level about 2Vpp; Observe the frequency of about 450 KHz we can set the frequency by varying TR6.
- Connect the oscilloscope to the output of the modulator **OUT** post. You obtain a waveform similar to the one of FIG. 1.10.
- The frequency deviation Δ F can be calculated as follows (refer to FIG. 1.11):
  - From the oscilloscope evaluate F_M and F_m, detecting the periods of the respective sine waves
  - The frequency deviation ΔF is defined as: $\Delta F = (F_M - F_m)/2$
- The value of the modulation index m_f is calculated by the relation $m_f = \Delta F/f$, where f is the frequency of the modulating signal.
- Then observe the FM signal as shown in FIG. 1.10.

EXPERIMENT NO.2

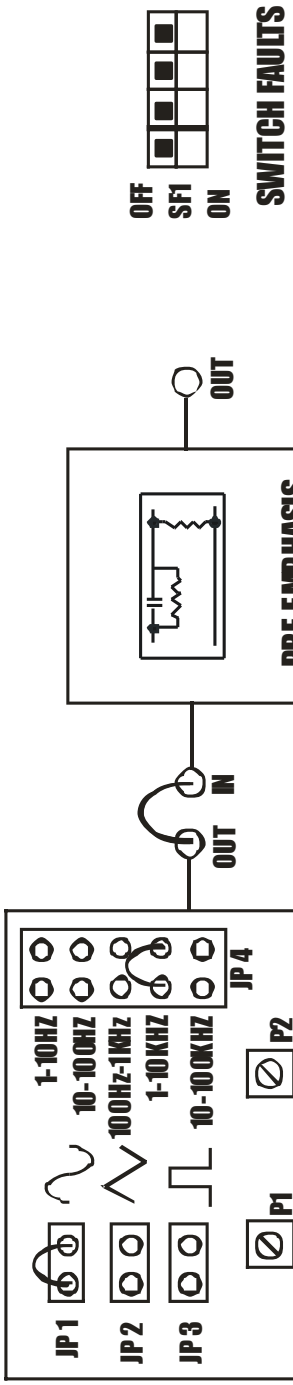

FIG.2.1 BLOCK DIAGRAM FOR STUDY OF PRE-EMPHASIS

EXPERIMENT NO: 2

NAME:-

Study of Pre-Emphasis circuit and it's response

OBJECTIVE:-

(A). To plot the characteristics of the pre-emphasis circuit

THEORY:-

Need For Pre Emphasis

Frequencies contain in human speech mostly occupy the region from 100 to 10,000 Hz , but most of the power is contained in the region of 500 Hz for men and 800 Hz for women. Common voice characteristics emit low frequencies higher in amplitude than higher frequencies. The problem is that in FM system the noise output of the receiver increases linearly with the frequency, which means that the signal to noise ratio becomes poorer as the modulating frequency increases.

Also, noise can make radio reception less readable and unpleasant. This noise is greatest in frequencies above 3KHz.The high frequency noise causes interference to the already weak high frequency voice. To reduce the effect of this noise and ensure an even power spread of audio frequencies,

Pre emphasis is used at the Transmitter Side

A pre-emphasis network in the transmitter accentuates the audio frequencies above 3 KHz, so providing the higher average deviation across the voice spectrum, thus improving the signal to noise ratio.

The pre-emphasis is obtained by using the simple audio filter, even simple RC filter will do the job. The pre-emphasis circuit produces higher output at higher frequencies because the capacitive reactance is decreased as the frequency increases.

The response of the pre-emphasis circuit will be as follows:

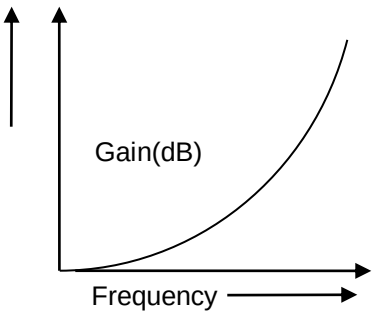

EQUIPMENTS:-

- ACL-FM Kit
- Power supply
- Oscilloscope
- Connecting links

NOTE: Keep All The Switch Faults In Off Position.

PROCEDURE:-

The characteristic of pre-emphasis circuit is given by output voltage of the pre-emphasis circuit as the function of instantaneous input frequency. It is possible to plot the curve of fig. By varying the input frequency and measuring the corresponding output voltage.

- Make the connections as shown in the block diagramFig.2.1**.**
- Connect the power supply with proper polarity to the kit ACL-FM while connecting this; ensure that the power supply is OFF.
- Connect the output of function generator to the **IN** of pre-emphasis circuit.
- Switch on the power supply and carry out the following presetting.
- **FUNCTION GENERATOR:** Frequency about 1KHz and level of 100mV p-p sine wave
- Now vary the frequency in steps of 500Hz and note down the output voltage at the OUT post of pre-emphasis circuit.
- Plot the graph of output voltage v/s input frequency on graph paper. The response should come as shown in the theory above.
- From the response you can easily understand that using the pre-emphasis Circuit we can increase the amplitude of modulating signal at higher frequencies thus improving the Signal to Noise ratio at higher frequencies.

EXPERIMENT NO. 3

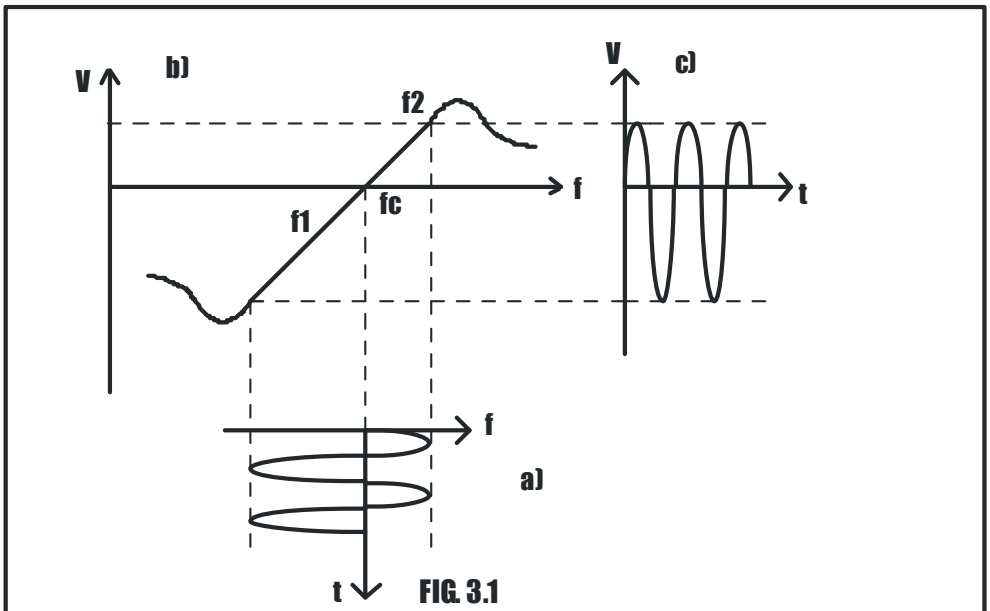

FIG. 3.1

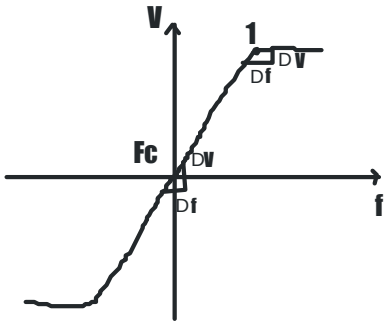

FIG 3.2

FIG 3.2A FREQUENCY DEMODULATOR CIRCUITS

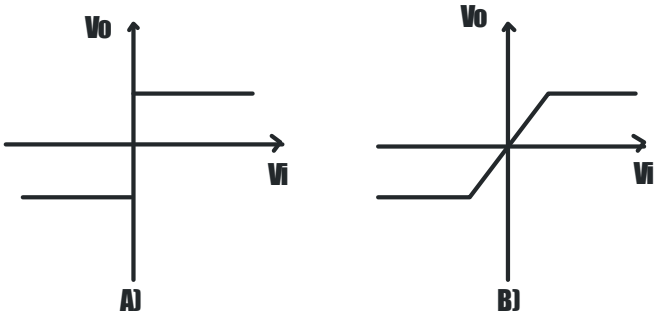

FIG 3.3 LIMITER CHRACTERISTICS A) Ideal B) Actual

EXPERIMENT NO: 3

NAME:-

Study of Frequency Demodulation

OBJECTIVE:-

A. To observe the Waveforms of the foster-seeley Demodulated Signal.
B. To Study the Ratio Demodulator.
C. To Study the phase locked loop Detector.
D. To Study the Quadrature Detector.
E. To Study the Detuned resonance detector

THEORY:-

3.1 Frequency Demodulation

To demodulate a frequency modulated signal a circuit is necessary which supplies the output with proportional voltage to the frequency deviation of the input modulated signal.
The ideal characteristic of the demodulator is a straight line, also if it is actually sufficient to obtain characteristics as the one of FIG. 3.1, which presents a linear behavior only for a certain frequency range (demodulator usage range). The figure reports:

a) The instantaneous frequency f of the modulated signal, oscillating between F1 and F2 (Fc frequency of the carrier).
b) The voltage/frequency characteristic curve of the demodulator.
c) The detected signal.

3.2 Sensitivity and Demodulation Non-Linearity

The Sensitivity and Non-Linearity are characteristic parameters of the frequency demodulator. Both parameters can be detected by the characteristic demodulation curve, shown in FIG. 3.2.
Sensitivity Sis defined by:

$$S = \frac{DV(f)}{df} \approx \frac{\Delta V}{\Delta f}$$

Where V(f)is the instantaneous output voltage, function of the instantaneous input frequency f. If Sc and S1 are the sensitivities calculated respectively in

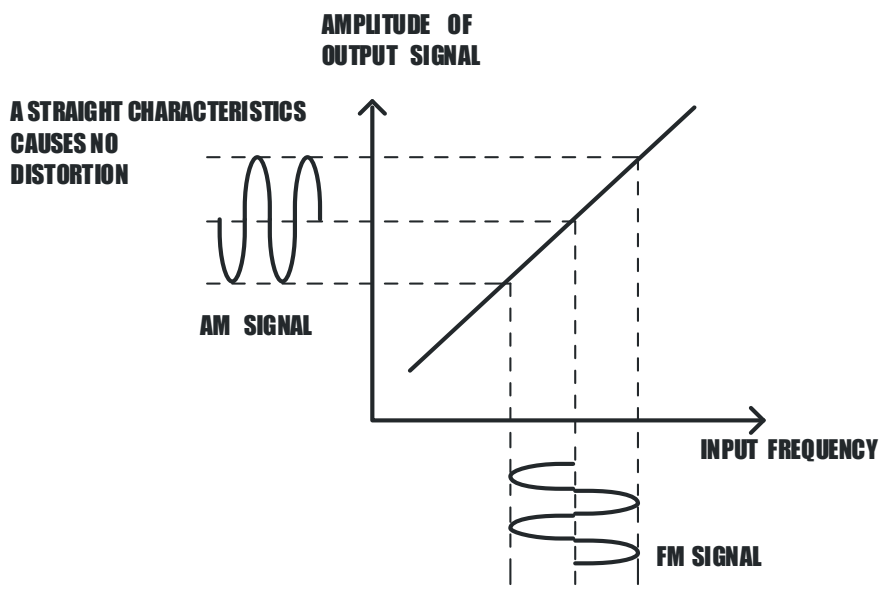

FIG.3.4 AN IDEAL LINEAR VOLTAGE / FREQUENCY CHARACTERISTICS

correspondence to the central frequency and on post 1, the Non-Linearity N.L.in post 1 is defined by:

$$N.L.= \frac{Sc-S1}{Sc} \bullet 100$$

3.3 Demodulation of FM Signals

An FM receiver is very similar to an AM receiver. The most significant change is that the demodulator must now extract the information signal from a frequency, rather than amplitude, modulated wave.

The basic requirement of any FM demodulator is therefore to convert frequency changes into changes in voltage, with the minimum amount of distortion.

To achieve this, it should ideally have a linear voltage/frequency characteristic, similar to that shown in FIG. 3.4.

A ‘demodulator’ can also be called a ‘discriminator’ or a ‘detector’.

Any design of circuit that has a linear voltage/frequency characteristic would be acceptable and we are going to consider the five most popular types.

In each case the main points to look for are:

- **How do they convert FM signals into AM signals?**
- **How linear is their response - this determines the amount of distortion in the final output?**
- **How good are they at rejecting noise signals?**

3.4 Frequency Demodulator Circuits

For the detection of the frequency modulated signals different circuit solutions have been used, some are out of use and others are used at the moment. Among the first ones, we mention

3.4.1 Travis Discrimination

It is based on amplitude variation, as function of frequency, introduced by a resonant circuit. The amplitude variation is detected via the diode.

3.4.2 Foster-Seeley Discriminator

It is based on the phase variation as function of frequency, introduced by a resonant circuit. The originative modulated signal and the shifted one are properly added, and the resulting signal is detected with the diode.

3.4.3 Ratio Discrimination

It has a behavior analogous to the Foster-Seeley one, but it is unaffected by the modulated signal amplitude.

3.4.4 Quadrature Detector

It is used in integrated circuits. The direct FM signal and the same signal shifted of 90° are multiplied between them; the resulting signal is proportional to the frequency deviation of THE INPUT FM SIGNAL.

3.4.5 PLL Detector

It constitutes one of the applications of the Phase Locked Loopand is, in respect to the last circuits, less sensitive to noise.

3.4.6 Detuned Resonance Detector

This is the simplest form of the demodulator .
In this the parallel tuned circuit deliberately detuned so that the incoming FM signal are first converted to AM signal and then using the diode detector circuit we get back the original signal.

3.5 Amplitude Limiter

The frequency demodulators are generally sensitive to the amplitude variation of the input FM signal. The output of the demodulator depends only on the frequency variation of the input signal, but also on its eventual amplitude variation (caused for example by the noise or by disturbances of different nature). To minimize this inconvenience, insert a limiter circuit before it, which removes or reduces the unwished amplitude variations.
The characteristics curves of the ideal limiter and an actual limiter are shown in FIG. 3.3 In the first case, the amplitude of the output signal is constant for any input signal amplitude; in the second case the output amplitude keeps constant only if the input signal gets over the minimum value.

3.6 Foster-Seeley Discriminator

FIG. 3.5 shows the typical circuit of a Foster-Seeley discriminator.
The FM signal is inductively coupled to the resonant circuit L2-C2, tuned to the central frequency of the modulated signal. The same signal is also taken, with C1, to the main socket of L2. The diodes D1 and D2, with the respective low pass filters C-R, form two envelope detectors.
Fo is the frequency at which the circuit L2-C2 is tuned. The operation of the circuit is analyzed in three situations:

- Instantaneous frequency fof the input FM signal equal to Fo.

  f = Fo

In the two secondary of L2 we add two voltages FIG. 3.6(A). One is the one induced with L1 by the input signal v_{FM}; the other is the input signal coupled directly via. C1. Being at the resonance frequency, the induced voltage v_{ind} will be shifted of 90° in respect to the voltage v_{FM}. The voltage coupled directly through C1 can be considered, if the reactance of C1 is small at the signal frequency, in phase with the input v_{FM}.

The voltages reaching D1 and D2 are the vectorial sum of $v_{FM}$and +/-vind/2, and have the same amplitude but opposed sign. The output vo, which is the sum of the two detected signals, in this case will be null.

- Instantaneous input frequency higher than Fo.
  f >Fo

When the instantaneous frequency of the input FM signal is superior to Fo, the resonant circuit L2-C2 has an inductive behavior and the vectorial diagram
FIG. 3.6(B) is obtained. The voltages of the diodes have in this case different amplitudes, and the resulting output voltage will be positive.

- Instantaneous input frequency lower than Fo.
  f <Fo

When instantaneous frequency of the input FM signal is lower than Fo, the resonant circuit L2-C2 has a capacitive behavior and the vectorial diagram of FIG. 3.6(C) is obtained. The voltages on the diodes have still different amplitudes, but the resulting voltage will be negative.

The main disadvantage of the Foster-Seeley demodulator is that it detects amplitude variations of the input signal, as the voltage amplitude vD1 and vD2 on the diodes
depends also on amplitude of the input signal. This inconvenience is minimized in the ratio demodulator.

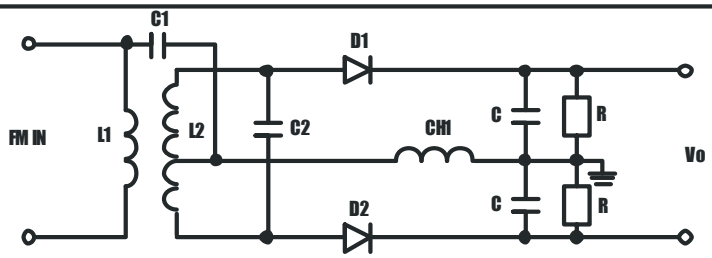

FIG. 3.5 FOSTER-SEELEY DISCRIMINATOR

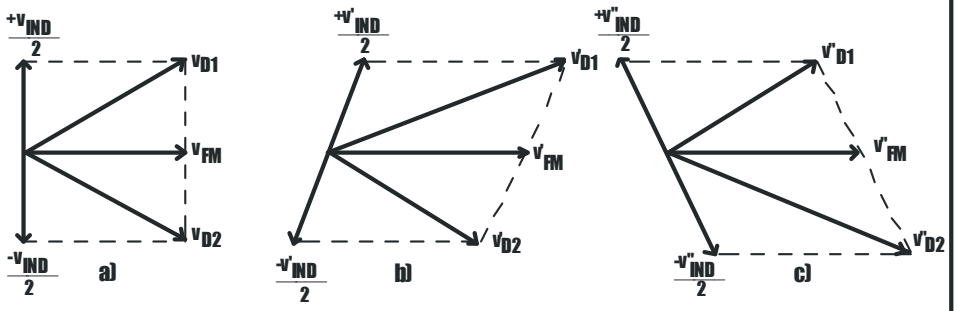

FIG 3.6 PHASE DIAGRAM

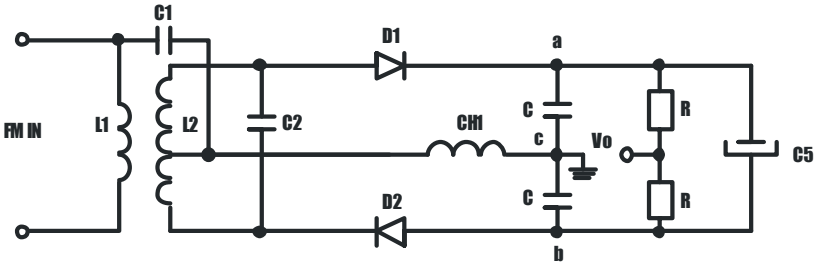

FIG 3.7 RATIO DISCRIMINATOR

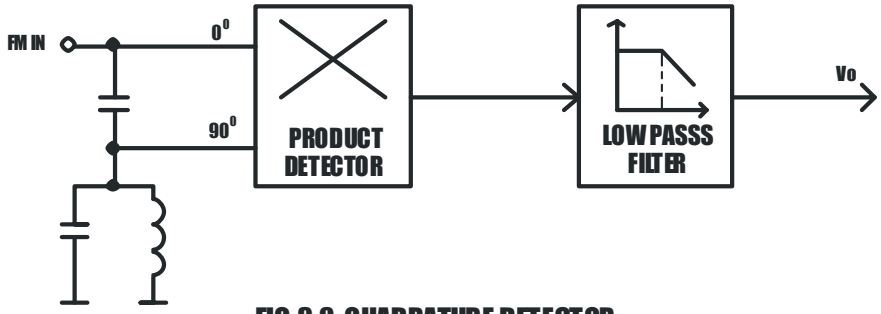

FIG 3.8 QUADRATURE DETECTOR

3.7 Ratio Discriminator

The operation of the circuit, as concerns the coupling of the FM signal to the two detection circuits and the vectorial diagrams, is similar to what seen for the Foster-Seeley discriminator. The capacitor C5, with higher value, has the purpose to highly reduce the amplitude voltage fluctuations vab, due to amplitude variations of the input signal. In this way the output voltage vo is not affected by unwished amplitude variations. We can write, in fact:

$$vo = \frac{v_{ae} + v_{eb}}{2} - v_{eb} = \frac{v_{ae} - veb}{2} =$$

$$vo = \frac{v_{ae} + v_{eb}}{2} \times \frac{(v_{ae} / v_{eb}) - 1}{(v_{ae} / v_{eb}) + 1} = \frac{v_{ab}}{2} \times \frac{(v_{ae} / v_{eb}) - 1}{(v_{ae} / v_{eb}) + 1}$$

As Veb is practically constant, the output vo depends only on the relation vae/veb, which varies only by the effect of the variations of the input frequency signal, and does not cause amplitude variations.

3.8 Quadrature Detector

FIG. 3.8 shows the functional diagram of the quadrature detector. A quadrature detector multiplies between them the direct FM signal and the same shifted signal by a resonant circuit LC.

At the frequency of resonance, corresponding to the central frequency of the FM signal, the shift is 90°. At variation of the input signal the shift introduced by the circuit LC will vary.

The multiplication of the direct FM signal and the shifted FM signal produces many components, among which the low frequency component proportional to the information. The low pass filter separates this signal.

3.9 The Phase – Locked Loop (Pll) Detector

This is another demodulator that employs a phase comparator circuit. It is a very good demodulator and has the advantage that it is available as a self-contained integrated circuit so there is no setting up required-you plug it in and it works. For these reasons it is often used in commercial broadcast receivers. It has very low levels of distortion and is almost immune from external noise signals and provides very low levels of distortion. Altogether a very nice circuit.

The overall action of the circuit may, at first, seem rather pointless. As we can see in FIG. 3.9 there is a voltage-controlled oscillator (VCO). The frequency of this oscillator is controlled by the DC output voltage from the output of the low pass filter. Now, this DC voltage keeps the oscillator running at the same frequency as the original input signal and 90^0 out of phase.

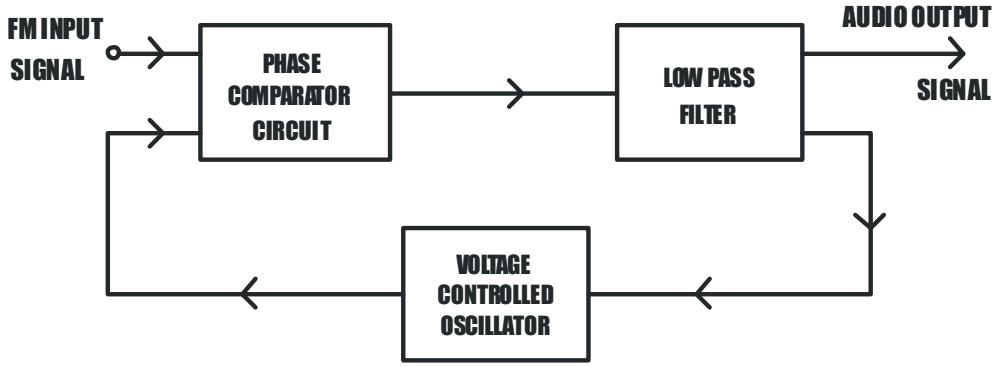

FIG.3.9 BLOCK DIAGRAM FOR PHASE LOCKED LOOP DETECTOR

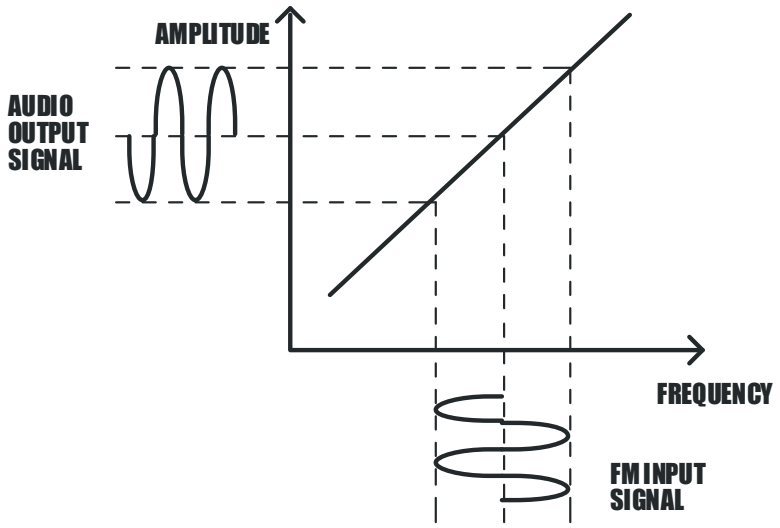

FIG.3.9A CHARACTERISTICS OF PHASE LOCKED LOOP DETECTOR

The question often arises as to why we would want the oscillator to run at the same frequency and 90^0 out of phase. And if we did, then why not just add a phase shifting circuit at the input to give the 90^0 phase shift?

The answer can be seen by imagining what happens when the input frequency changes – as it would with an FM signal.
If the input frequency increases and decreases, the VCO frequency is made to follow it. To do this, the input control voltage must increase and decrease. It is these changes of DC voltage level that form the demodulated signal.
The AM signal then passes through a signal buffer to prevent any loading effects from disturbing the VCO and then through an audio amplifier it necessary.
The Frequency response is highly linear as shown in FIG. 3.9A.

3.10 Detuned Resonance Detector

This is the simplest form of demodulator.
We can easily say that as the input frequency to the circuit changes, the amplitude of the output signal will increase and decrease. For example, if the frequency of the incoming signal is increased, the operating point will move towards the right on the diagram. This would cause an increase in the amplitude of the output signal.
An FM signal will therefore result in the amplitude modulated signal at the output.
This amplitude modulated signal is then given to the diode detector (envelope detector) circuit which follows the amplitude variations in the signal and the final audio output appears across the cathode of the diode.
This output is then passed to the low pass filter to remove the unwanted DC component and the ripple.

A. To Observe the Waveforms Of Foster-Seeley Demodulated Signal

EQUIPMENTS:-

- ACL-FM & ACL-FD Kits.
- Power supply.
- Oscilloscope.
- Volt meter.
- Frequency meter.
- Connecting Links.

NOTE: Keep All the Switch Faults In Off Position

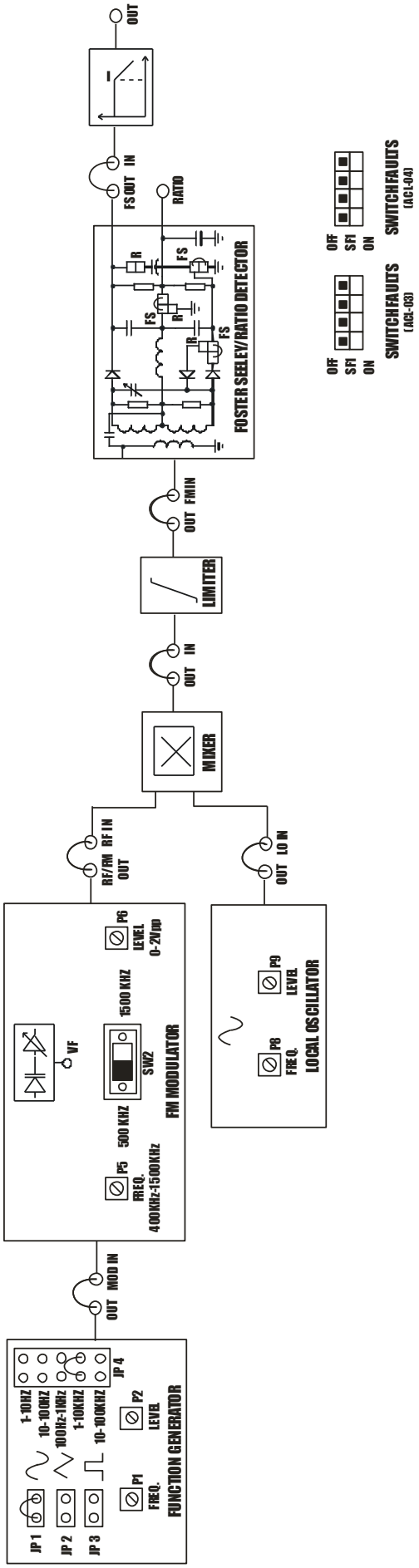

FIG.3.11 BLOCK DIAGRAM FOR FM DEMODULATOR (FOSTER SEELEY)

PROCEDURE:-

- Refer to the FIG. 3.11 & Carry out the following connections.
- Connect the o/p of Function Generator (ACL-FM) **OUT** post to the **MOD IN** (ACL-FM) post.
- Connect the o/p of FREQUENCY MODULATOR **FM/RF OUT** post to the I/p of RF IN of mixer in ACL-FM.
- Connect the power supply with proper polarity to the kit ACL-FM & ACL-FD, while connecting this; ensure that the power supply is OFF.
- Switch ON the power supply and Carry out the following presetting:
  - **Frequency Modulator:** Switch on 500KHz; LEVEL about 1 Vpp; FREQ. about 450 KHz.
  - Frequency demodulator in Foster-Seeley mode (jumpers in FS position).
  - **Function Generator:** Sine wave (JP1); LEVEL about 100mVpp; FREQ. about 1 KHz.
  - **Local Oscillator:** LEVEL about 1 Vpp; FREQ. About1000 KHz on (Center).
- Connect the LOCAL OSCILLATOR **OUT** to the **LO IN** of the MIXER and MIXER **OUT** to the LIMITER **IN** post with the help of shorting links.
- Then connect the LIMITER **OUT** post to the **FM IN** of FOSTER- SEELEY DETECTOR and **FS OUT** to the **IN** of LOW PASS FILTER.
- Then observe frequency modulated signal at FM/RF **OUT** post of FREQUENCY MODULATOR and achieve the same signal by setting frequency of LOCAL OSCILLATOR at **OUT** post of **MIXER,** then observe LIMITER OUT post where output is clear from noise and stabilize around a value of about 1.5Vpp.
- Connect the oscilloscope across post **FS OUT** of ACL-FD (detected signal) and FUNCTION GENERATOR **OUT** post (modulating signal) of ACL-FD. If the central frequency of the discriminator and the carrier frequency of the FM signal and local oscillator frequency coincide, you obtain two signals The fact that there is still some high-frequency ripple at the output of the FOSTER-SEELEY DETECTOR block indicates that the passive low pass filter circuit at the block's output (as shown in Figure) is not sufficient to remove this unwanted high-frequency component. We use the LOW PASS FILTER block to overcome this problem.
  The LOW - PASS FILTER block strongly attenuates the high-frequency ripple component at the detector's output, and also blocks the d.c. offset voltage. Consequently, the signal at the output of the LOW - PASS FILTER block should very closely resemble the original audio modulating signal.
- Note that the demodulated signal has null continuous component. Vary the amplitude of the FM signal and check that the amplitude of the detected signal varies, too.
- Increase the carrier frequency and note that a positive voltage is added to the detected signal. Still increasing the frequency, the detected signal presents a distortion (in these condition you operate on a non-linear zone of the discriminator.)

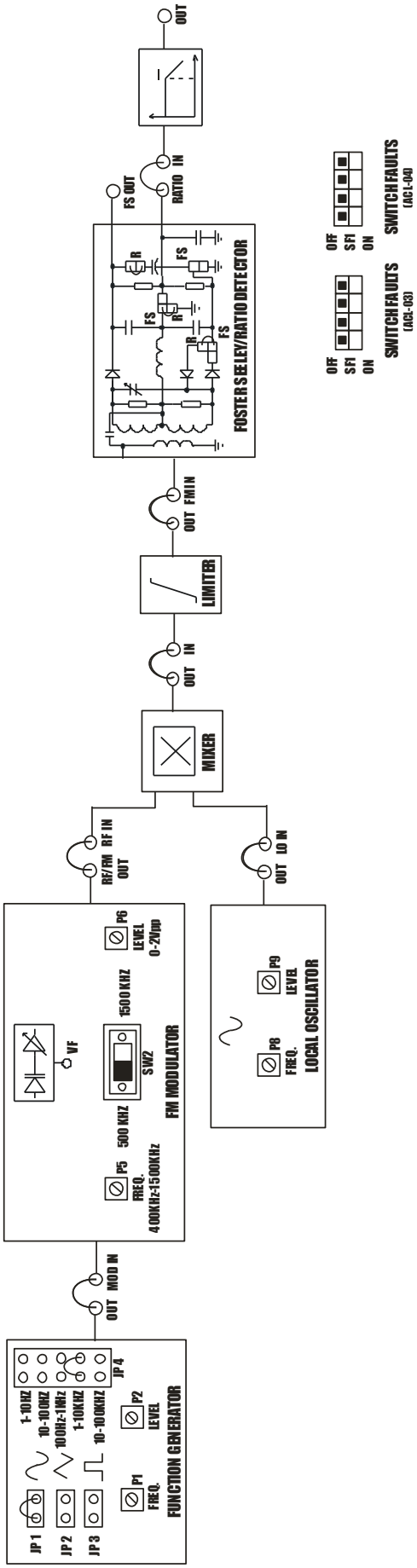

FIG.3.12 BLOCK DIAGRAM FOR FM DEMODULATOR (RATIO)

- Reduce the carrier frequency to its proper value (450 KHz). Increase the amplitude of the modulating signal (LEVEL of the FUNCTION GENERATOR) so to generate an FM signal with frequency deviation over the linear zone of the discriminator. You obtain a much distorted detected signal.

SWITCH FAULTS:-

Note: Keep the connections as per the procedure. Now put the corresponding switch fault button in ON position and observe the effect on the output . The faults are normally used one at a time

- Put switch 1 of SF1 in ACL-FM switch fault section to ON position. This will open the capacitor C33 & Resistor R82 in the MIXER circuit. Hence the O/P signal will get disappear.
- Put switch 1 of SF1 in ACL-FD switch fault section to ON position. This will open resistor R3 in limiter section. Due to this limiter action is disabled & the output of limiter will contain the amplitude variations
- Put switch 4 of SF1 in ACL-FD switch fault section to ON position. This will open the capacitor C19 in low pass filter thus the output will contain noise.

B. To Study the Ratio Demodulator

EQUIPMENTS:-

- ACL-FM & ACL-FD Kits.
- Power supply.
- Oscilloscope.
- Volt meter.
- Frequency meter.
- Connecting Links.

NOTE: Keep All the Switch Faults In Off Position

PROCEDURE:-

- Refer to the FIG. 3.12 & Carry out the following connections.
- Connect the o/p of Function Generator (ACL-FM) **OUT** post to the **MOD IN** (ACL-FM) post.
- Connect the o/p of FREQUENCY MODULATOR **FM/RF OUT** post to the I/p of RF IN of mixer in ACL-FM.
- Connect the power supply with proper polarity to the kit ACL-FM & ACL-FD, while connecting this; ensure that the power supply is OFF.

- Switch ON the power supply and Carry out the following presetting:
  - **FREQUENCY MODULATOR:** Switch on 500KHz; LEVEL about 1 Vpp; FREQ. about 450 KHz.
  - Frequency demodulator in Ratio mode (jumpers in R position).
  - **FUNCTION GENERATOR:** Sine wave (JP1); LEVEL about 100mVpp; FREQ. about 1KHz.
  - **LOCAL OSCILLATOR:** LEVEL about 1 Vpp; FREQ. About1000 KHz on (Center).
- Connect the LOCAL OSCILLATOR **OUT** to the **LO IN** of the MIXER and **MIXEROUT** to the **LIMITERIN** post with the help of shorting links.
- Then connect the **LIMITEROUT** post to the **FM IN** of RATIO DETECTOR and **RATIO OUT** to the **IN** of LOW PASS FILTER**.**
- Then observe frequency modulated signal at **FM/RFOUT** post of FREQUENCY MODULATOR and achieve the same signal by setting frequency of LOCAL OSCILLATOR at **OUT** post of **MIXER,** then observe **LIMITER OUT** post where output is clear from noise and stabilize around a value of about 1.5Vpp.
- Connect the oscilloscope across post **RATIO OUT** of ACL-FD (detected signal) and FUNCTION GENERATOR **OUT** post (modulating signal) of ACL-FD. If the central frequency of the discriminator and the carrier frequency of the FM signal and local oscillator frequency coincide, you obtain two signals. The fact that there is still some high-frequency ripple at the output of the RATIO DETECTOR block indicates that the passive low pass filter circuit at the block's output (as shown in Figure) is not sufficient to remove this unwanted high-frequency component. We use the LOW PASS FILTER block to overcome this problem. The LOW - PASS FILTER block strongly attenuates the high-frequency ripple component at the detector's output, and also blocks the d.c. offset voltage. Consequently, the signal at the output of the LOW - PASS FILTER block should very closely resemble the original audio modulating signal.
- Note that the demodulated signal has null continuous component. Vary the amplitude of the FM signal and check that the amplitude of the detected signal varies, too.
- Increase the carrier frequency and note that a positive voltage is added to the detected signal. Still increasing the frequency, the detected signal presents a distortion (in these condition you operate on a non-linear zone of the discriminator.)
- Reduce the carrier frequency to its proper value (450 KHz). Increase the amplitude of the modulating signal (LEVEL of the FUNCTION GENERATOR) so to generate an FM signal with frequency deviation over the linear zone of the discriminator. You obtain a much distorted detected signal.

SWITCH FAULTS:-

Note: Keep the connections as per the procedure. Now put the corresponding switch fault button in ON position and observe the effect on the output . The faults are normally used one at a time

- Put switch 1 of SF1 in ACL-FM switch fault section to ON position. This will open the capacitor C33 & Resistor R82 in the MIXER circuit. Hence the O/P signal will get disappear.
- Put switch 4 of SF1 in ACL-FM switch fault section to ON position. This will open resistor R58 in local oscillator so there will not be variation in frequency signal.
- Put switch 1 of SF1 in ACL-FD switch fault section to ON position. This will open resistor R3 in limiter section. Due to this limiter action is disabled & the output of limiter will contain the amplitude variations
- Put switch 4 of SF1 in ACL-FD switch fault section to ON position. This will open the capacitor C19 in low pass filter thus the output will contain noise.

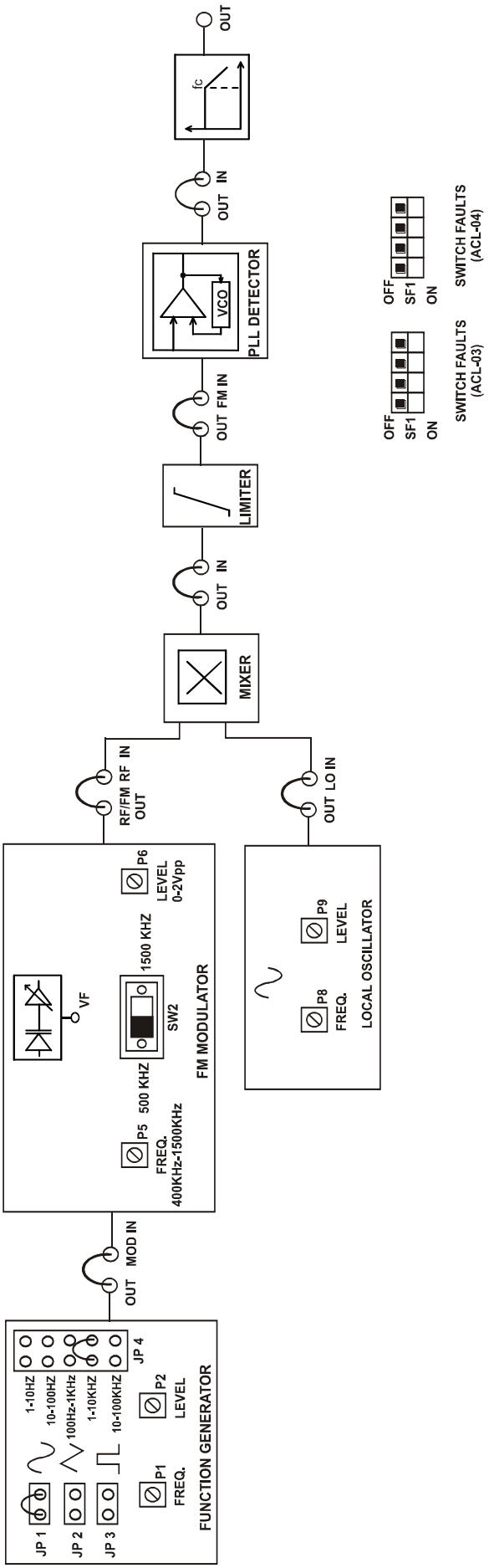

FIG.3.13 BLOCK DIAGRAM FOR PHASE LOCKED LOOP DETECTOR

C. To Study the Phase Locked Loop Detector

EQUIPMENTS:-

- ACL-FM&ACL-FD Kits.
- Power supply.
- Oscilloscope.
- Volt meter.
- Frequency meter.
- Connecting Links.

NOTE: Keep All the Switch Faults In Off Position

PROCEDURE:-

- Refer to the FIG. 3.13 & Carry out the following connections.
- Connect the o/p of Function Generator (ACL-FM) **OUT** post to the **MOD IN** (ACL-FM) post.
- Connect the o/p of FREQUENCY MODULATOR **FM/RF OUT** post to the I/p of RF IN of mixer in ACL-FM.
- Connect the power supply with proper polarity to the kit ACL-FM&ACL-FD, while connecting this; ensure that the power supply is OFF.
- Switch ON the power supply and Carry out the following presetting:
  - **FREQUENCY MODULATOR:** Switch on 500KHz; LEVEL about 1 Vpp; FREQ. About 450 KHz
  - **Function Generator:** Sine wave (JP1); LEVEL about 100mVpp; FREQ. about 1KHz.
  - **LOCAL OSCILLATOR:** LEVEL about 1 Vpp; FREQ. About 1000KHz on (Center).
- Connect the LOCAL OSCILLATOR **OUT** to the **LO IN** of the MIXER and MIXER **OUT** to the LIMITER **IN** post with the help of shorting links.
- Then connect the LIMITER **OUT** post to the **IN** of phase locked loop Detector and **OUT** post to the **IN** of LOW PASS FILTER.
- Then observe frequency modulated signal at FM/RF **OUT** post of FREQUENCY MODULATOR and achieve the same signal by setting frequency of LOCAL OSCILLATOR at **OUT** post of **MIXER,** then observe LIMITER OUT post where output is clear from noise and stabilize around a value of about 1.5Vpp.
- Connect the oscilloscope across post **OUT** of PLL DETECT0R ACL-FD (detected signal) and FUNCTION GENERATOR **OUT** post (modulating signal) of ACL-FM. The incoming FM signal is taken to one input of the PHASE COMPARATOR CIRCUIT, where its phase is compared with the square-wave output from the VOLTAGE- CONTROLLED OSCILLATOR (VCO). If the central frequency of the detector and the carrier frequency of the FM signal and local oscillator frequency coincide, you obtain two signals. The fact that there is still some high-frequency ripple at the output of the PLL DETECT0R block, we use the LOW PASS FILTER block to overcome this problem.
  The LOW - PASS FILTER block strongly attenuates the high-frequency ripple component at the detector's output, and also blocks the d.c. offset voltage.

Consequently, the signal at the output of the LOW - PASS FILTER block should very closely resemble the original audio modulating signal.

- Note that the demodulated signal has null continuous component. Vary the amplitude of the FM signal and check that the amplitude of the detected signal varies, too.

SWITCH FAULTS:-

Note: Keep the connections as per the procedure. Now put the corresponding switch fault button in ON position and observe the effect on the output . The faults are normally used one at a time

- Put switch 1 of SF1 in ACL-FM switch fault section to ON position. This will open capacitor C33 & Resistor R82 in the MIXER circuit. Hence the O/P signal will get disappear.
- Put switch 4 of SF1 in ACL-FM switch fault section to ON position. This will open resistor R58 in local oscillator so there will not be variation in frequency signal.
- Put switch 1 of SF1 in ACL-FD switch fault section to ON position. This will open resistor R3 in limiter section. Due to this limiter action is disabled & the output of limiter will contain the amplitude variations.
- Put switch 3 of SF1 in ACL-FD switch fault section to ON position. This will open the resistor R27 connected to pin 11 of U4 (4046). This changes the center frequency of PLL and thus no output is obtained.
- Put switch 4 of SF1 in ACL-FD switch fault section to ON position. This will open the capacitor C19 in low pass filter thus the output will contain noise.

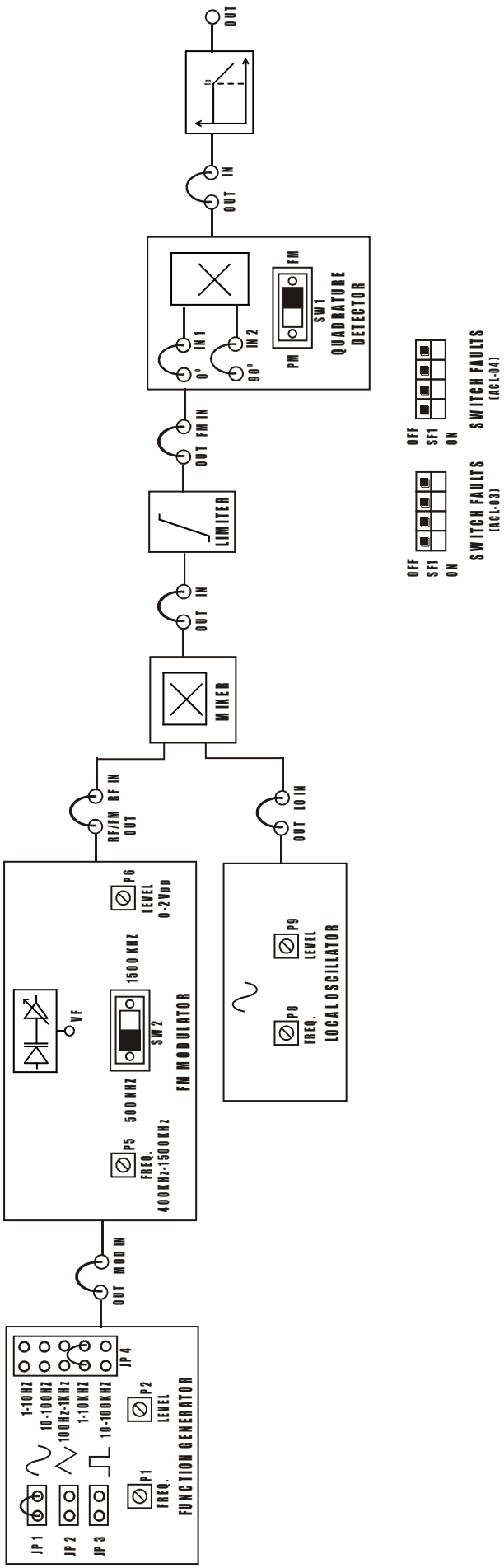

FIG.3.14 BLOCK DIAGRAM FOR QUADRATURE DETECTOR

D. To Study the Quadrature Detector

EQUIPMENTS:-

- ACL-FM & ACL-FD Kits.
- Power supply.
- Oscilloscope.
- Frequency meter.
- Connecting Links.

NOTE: Keep All the Switch Faults In Off Position

PROCEDURE:-

- Refer to the FIG. 3.14 & Carry out the following connections.
- Connect the o/p of Function Generator (ACL-FM) **OUT** post to the **MOD IN** (ACL-FM) post.
- Connect the o/p of FREQUENCY MODULATOR **FM/RF OUT** post to the i/p of RF IN of mixer in ACL-FM.
- Connect the power supply with proper polarity to the kit ACL-FM&ACL-FD, while connecting this; ensure that the power supply is OFF.
- Switch ON the power supply and Carry out the following presetting:
  - **FREQUENCY MODULATOR:** Switch on 500kHz; LEVEL about 1 Vpp; FREQ. About 450 kHz
  - **FUNCTION GENERATOR:** Sine wave (JP1); LEVEL about 100mVpp; FREQ. about 1KHz.
  - **LOCAL OSCILLATOR:** LEVEL about 1 Vpp; FREQ. About 1000 kHz on (Center).
- Connect the LOCAL OSCILLATOR **OUT** to the **LO IN** of the MIXER and MIXER **OUT** to the LIMITER **IN** post with the help of shorting links.
- Then connect the LIMITER **OUT** post to the **FMIN** of QUADRATURE **DETECTOR.**
- Connect **0°** post to **IN1** post of the quadrature detector (ACL-FD) and Connect **90°**post to **IN2** post of the quadrature detector (ACL-FD) also connect **OUT** post to the **IN** of LOW PASS FILTER.
- Then observe frequency modulated signal at FM/RF **OUT** post of FREQUENCY MODULATOR and achieve the same signal by setting frequency of LOCAL OSCILLATOR at **OUT** post of **MIXER,** then observe LIMITER **OUT** post where output is clear from noise and stabilize around a value of about 1.5Vpp.
- Connect the oscilloscope across post **OUT** of QUADRATURE DETECT0R ACL-FD (detected signal) and FUNCTION GENERATOR **OUT** post (modulating signal) of ACL-FM also If the central frequency of the detector and the carrier frequency of the FM signal and local oscillator frequency coincides, you obtain two signals. Then connect the oscilloscope (probes 10:1) to the two inputs of the quadrature detector (posts IN1 and IN2). Check that the two signals are shifted nearly 90º. The fact that there is still some high-frequency

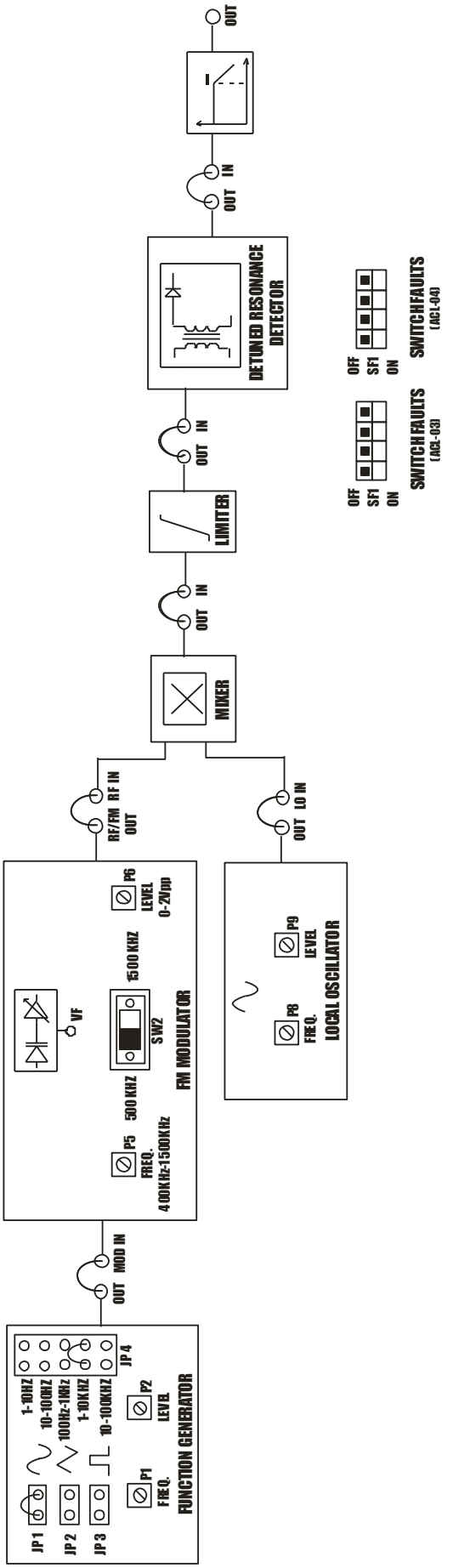

FIG.3.15 BLOCK DIAGRAM FOR DETUNED RESONANCE DETECTOR

ripple at the output of the QUADRATURE DETECT0R block indicates that the passive low pass filter circuit at the block's output (as shown in Figure) is not sufficient to remove this unwanted high-frequency component. We use the LOW PASS FILTER block to overcome this problem. The LOW - PASS FILTER block strongly attenuates the high-frequency ripple component at the detector's output, and also blocks the dc. offset voltage. Consequently, the signal at the output of the LOW - PASS FILTER block should very closely resemble the original audio modulating signal.

- Note that the demodulated signal has null continuous component. Vary the amplitude of the FM signal and check that the amplitude of the detected signal varies, too.
- Increase the carrier frequency and note that a positive voltage is added to the detected signal. Still increasing the frequency, the detected signal presents a distortion (In this condition you operate on a non-linear zone of the discriminator.)
- Reduce the carrier frequency to its proper value (450 KHz). Increase the amplitude of the modulating signal (LEVEL of the FUNCTION GENERATOR) so to generate an FM signal with frequency deviation over the linear zone of the detector. You obtain a much distorted detected signal.

SWITCH FAULTS:-

Note: Keep the connections as per the procedure. Now put the corresponding switch fault button in ON position and observe the effect on the output . The faults are normally used one at a time

- Put switch 1 of SF1 in ACL-FM switch fault section to ON position. This will open capacitor C33 & Resistor R82 in the MIXER circuit. Hence the O/P signal will get disappear.
- Put switch 4 of SF1 in ACL-FM switch fault section to ON position. This will open resistor R58 in local oscillator so there will not be variation in frequency signal.
- Put switch 1 of SF1 in ACL-FD switch fault section to ON position. This will open resistor R3 in limiter section. Due to this limiter action is disabled & the output of limiter will contain the amplitude variations.
- Put switch 2 of SF1 in ACL-FD switch fault section to ON position. This will
- open the pin 4 of U2 (MC 1496) in quadrature detector section , this will disturb the output of the detector.
- Put switch 4 of SF1 in ACL-FD switch fault section to ON position. This will open the capacitor C19 in low pass filter thus the output will contain noise.

E. To Study the Detuned Resonance Circuit

EQUIPMENTS:-

- Modules ACL-FM & ACL-FD.
- Power supply
- Oscilloscope.
- Frequency meter.
- Connecting Links.

NOTE: Keep All the Switch Faults In Off Position

PROCEDURE:-

- Refer to the FIG. 3.15 & Carry out the following connections.
- Connect the o/p of Function Generator (ACL-FM) **OUT** post to the **MOD IN** (ACL-FM) post.
- Connect the o/p of FREQUENCY MODULATOR **FM/RF OUT** post to the i/p of RF IN of mixer in ACL-FM.
- Connect the power supply with proper polarity to the kit ACL-FM&ACL-FD, while connecting this; ensure that the power supply is OFF.
- Switch ON the power supply and Carry out the following presetting:
  - **FREQUENCY MODULATOR:** Switch on 500kHz; LEVEL about 1 Vpp; FREQ. About 450 kHz
  - **FUNCTION GENERATOR:** Sine wave (JP1); LEVEL about 100mVpp; FREQ. about 1KHz.
  - **LOCAL OSCILLATOR:** LEVEL about 1 Vpp; FREQ. About 1000 kHz on (Center).
- Connect the LOCAL OSCILLATOR **OUT** to the **LO IN** of the MIXER and MIXER **OUT** to the LIMITER **IN** post with the help of shorting links.
  Then connect the LIMITER **OUT** post to the **IN** of DETUNED RESONANCE DETECTOR
- Connect the oscilloscope across post **OUT** of ACL-FD (detected signal) and FUNCTION GENERATOR **OUT** post (modulating signal) of ACL-FD. If the central frequency of the detector and the carrier frequency of the FM signal and local oscillator frequency coincide, you obtain two signals. The fact that there is still some high-frequency ripple at the output of the DETUNED RESONANCE DETECTOR block indicates that the passive low pass filter circuit at the block's output (as shown in Figure) is not sufficient to remove this unwanted high-frequency component. We use the LOW PASS FILTER block to overcome this problem. The LOW - PASS FILTER block strongly attenuates the high-frequency ripple component at the detector's output, and also blocks the d.c. offset voltage. Consequently, the signal at the output of the LOW - PASS FILTER block should very closely resemble the original audio modulating signal.

SWITCH FAULTS:-

Note: Keep the connections as per the procedure. Now put the corresponding switch fault button in ON position and observe the effect on the output . The faults are normally used one at a time

- Put switch 1 of SF1 in ACL-FM switch fault section to ON position. This will open capacitor C33 & Resistor R82 in the MIXER circuit. Hence the O/P signal will get disappear.
- Put switch 4 of SF1 in ACL-FM switch fault section to ON position. This will open the resistor R58 in local oscillator so there will not be variation in frequency signal.
- Put switch 4 of SF1 in ACL-FD switch fault section to ON position. This will open the capacitor C19 in low pass filter thus the output will contain noise.

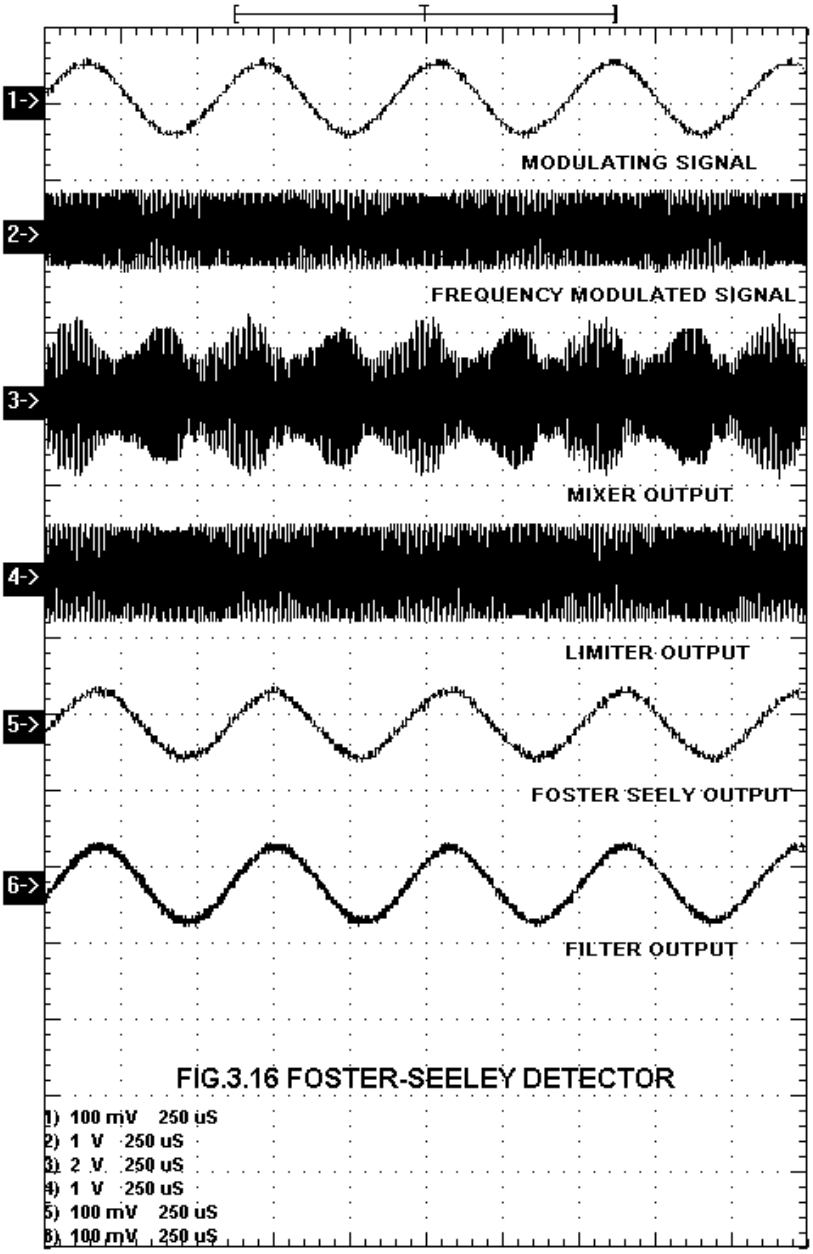

FIG.3.16 FOSTER-SEELEY DETECTOR

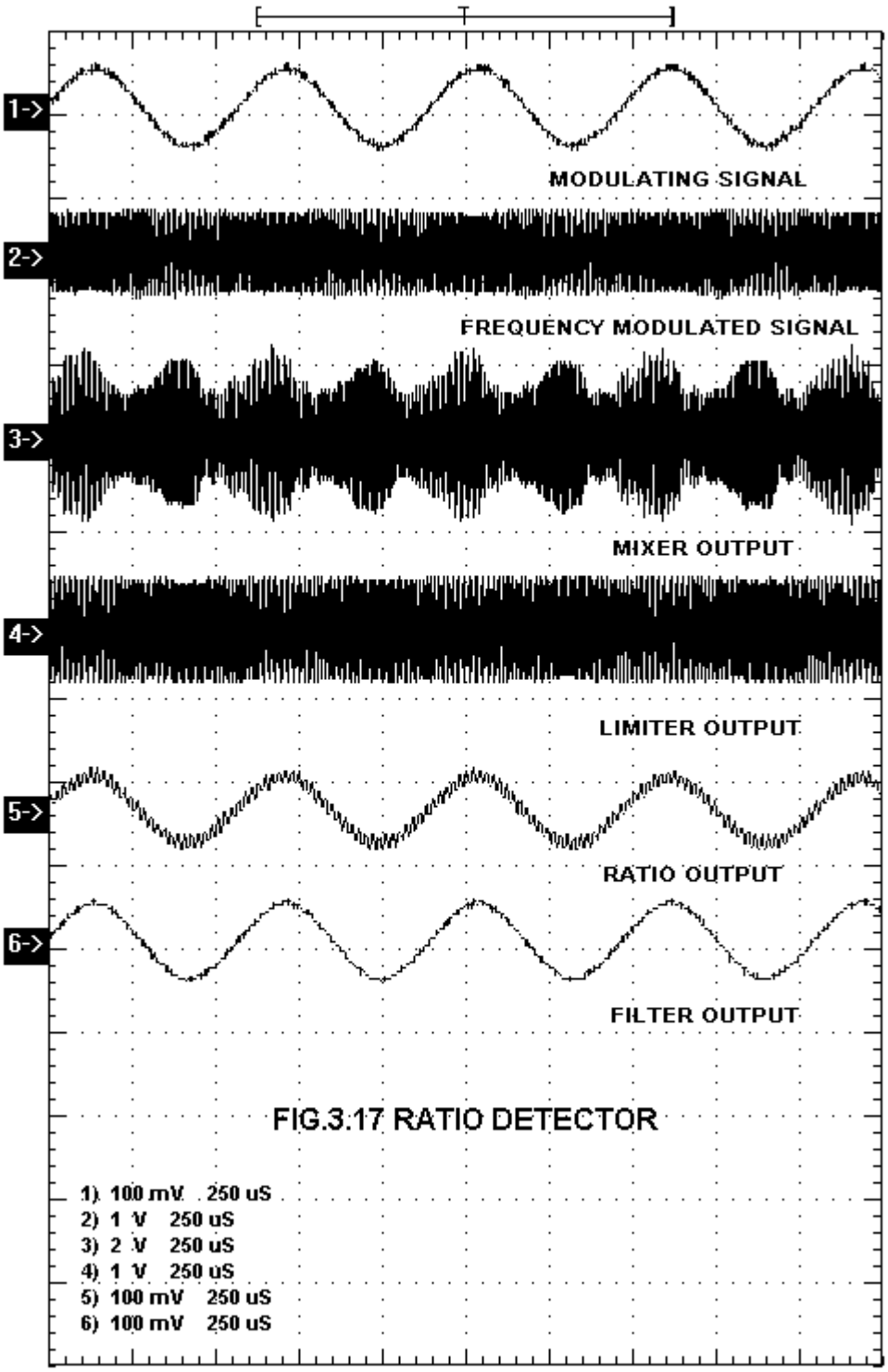

FIG.3.17 RATIO DETECTOR

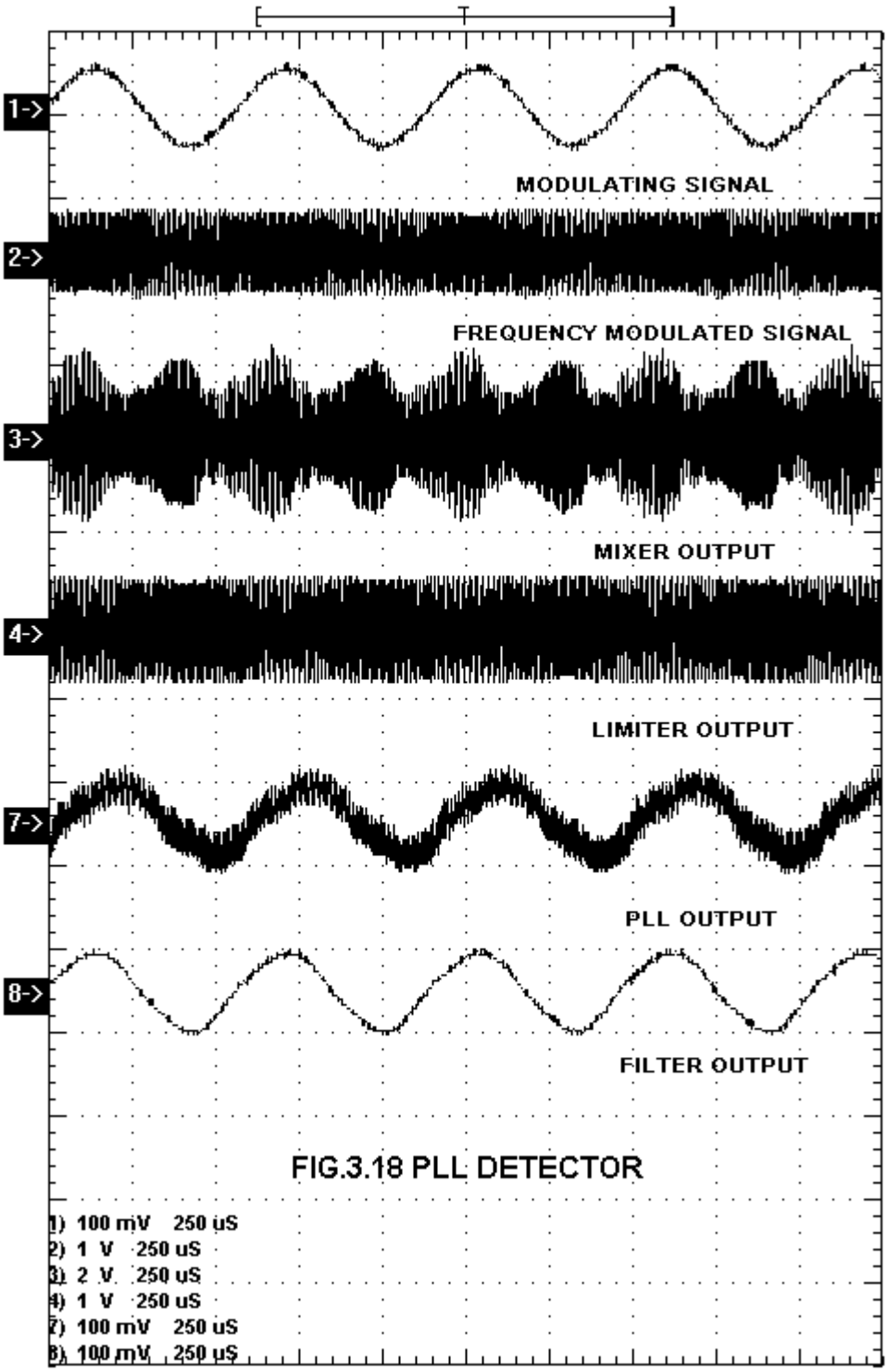

FIG.3.18 PLL DETECTOR

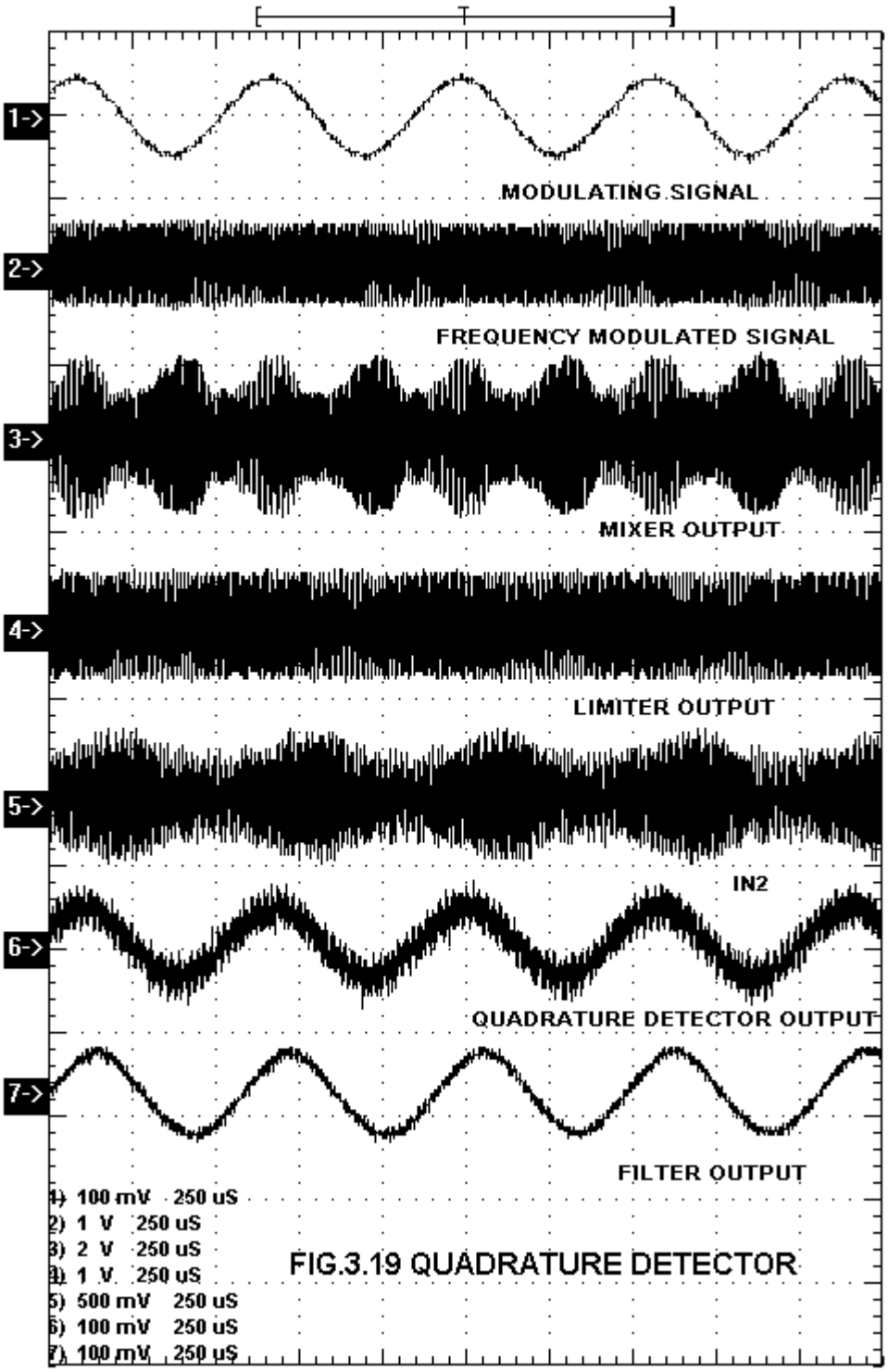

FIG.3.19 QUADRATURE DETECTOR

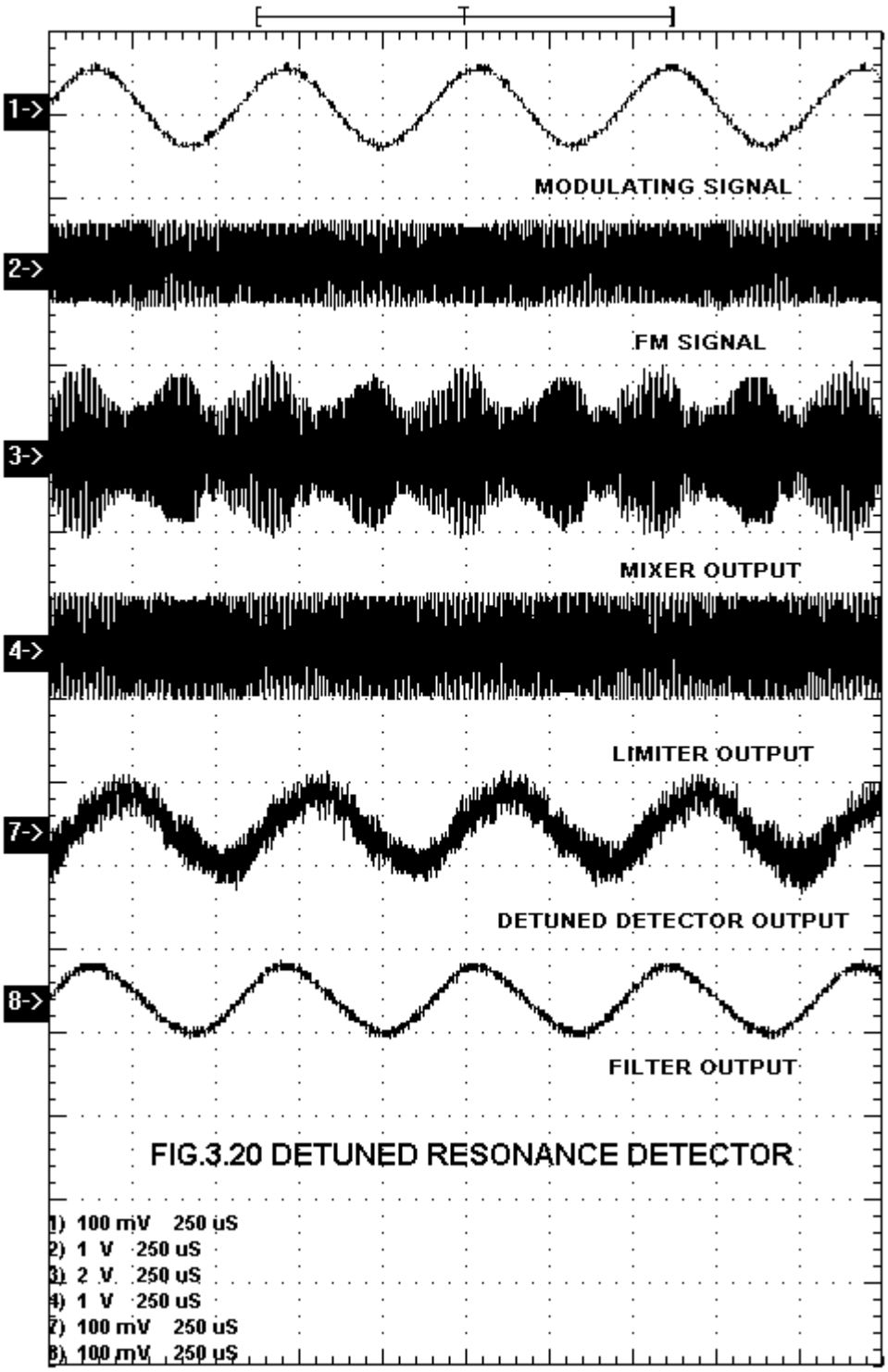

FIG.3.20 DETUNED RESONANCE DETECTOR

EXPERIMENT NO.4

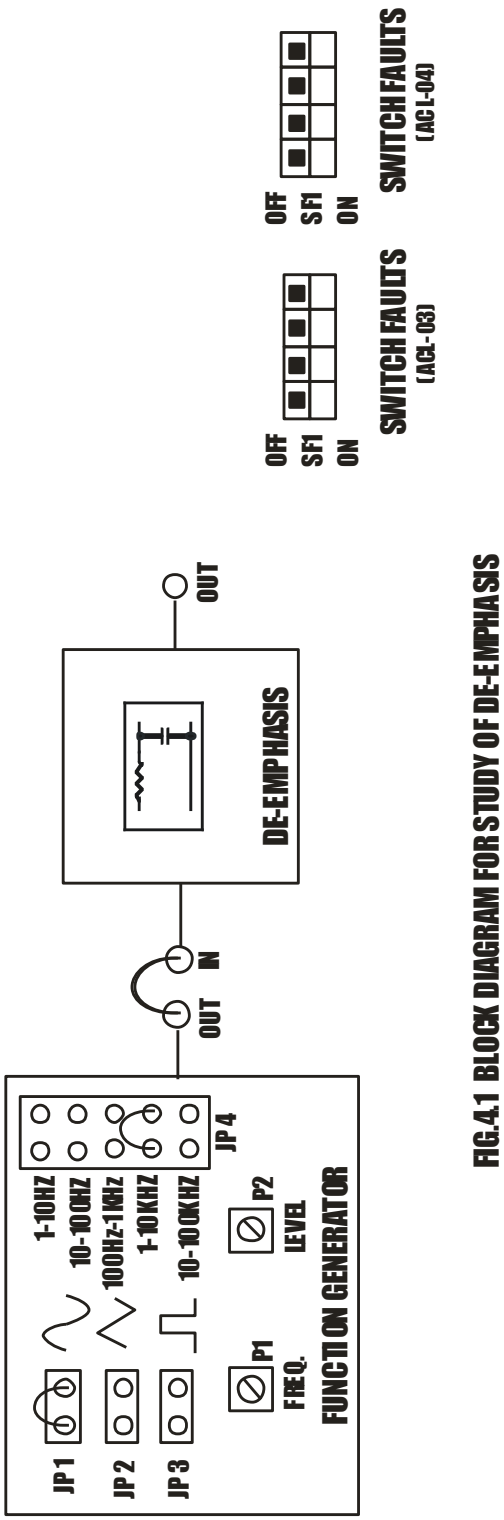

FIG.4.1 BLOCK DIAGRAM FOR STUDY OF DE-EMPHASIS

EXPERIMENT NO: 4

NAME:-

Study of De-emphasis Circuit And It's Response

OBJECTIVE:-

To plot the characteristics of the de emphasis circuit

THEORY:-

The problem in FM broadcasting is that noise and hiss tends to be more noticeable , especially when receiving the weaker stations .To reduce this effect , the treble response of the audio signal is artificially boosted prior to transmission. This is known as pre emphasis.
At the receiver side a corresponding filter or "de emphasis" circuit is required to reduce the treble response to correct level. Since most noise and hiss tends to be at the higher frequencies , the de emphasis removes a lot of this. Pre emphasis and de emphasis thus allow an improved signal to noise ratio to be achieved while maintaining the frequency response of the original audio signal.
The de emphasis stage is used after the detector stage.
The response of the de emphasis circuit can be understood from the following graph:

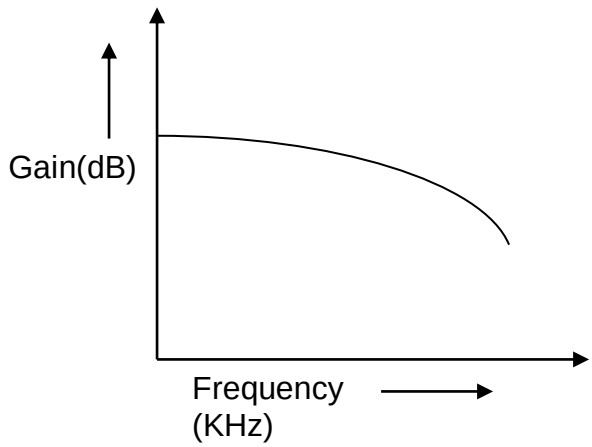

A.) To Study the Response Of De-emphasis Circuit

EQUIPMENTS:-

- ACL-FM & ACL-FD Kits
- Power supply
- Oscilloscope
- Frequency meter
- Connecting links

NOTE: Keep All the Switch Faults In Off Position

PROCEDURE:-

The characteristic of de-emphasis circuit is given by output voltage of the deemphasize circuit as the function of instantaneous input frequency. It is possible to plot the curve of fig. By varying the input frequency and measuring the corresponding output voltage.

- Make the connections as shown in the block diagramFig.4.1**.**
- Connect the power supply with proper polarity to the kit ACL-FD while connecting this; ensure that the power supply is OFF.
- Connect the output of function generator (ACL-FM) to the **IN** of de-emphasis' circuit (ACL-FD).
- Switch on the power supply and carry out the following presetting.
- **FUNCTION GENERATOR:** Frequency about 1KHz and level of 100mV p-p sine wave
- Now vary the frequency in steps of 500Hz and note down the output voltage at the OUT post of de-emphasis circuit.
- Plot the graph of input frequency v/s output voltage on graph paper. The response should come as shown in theory.

EXPERIMENT NO.5

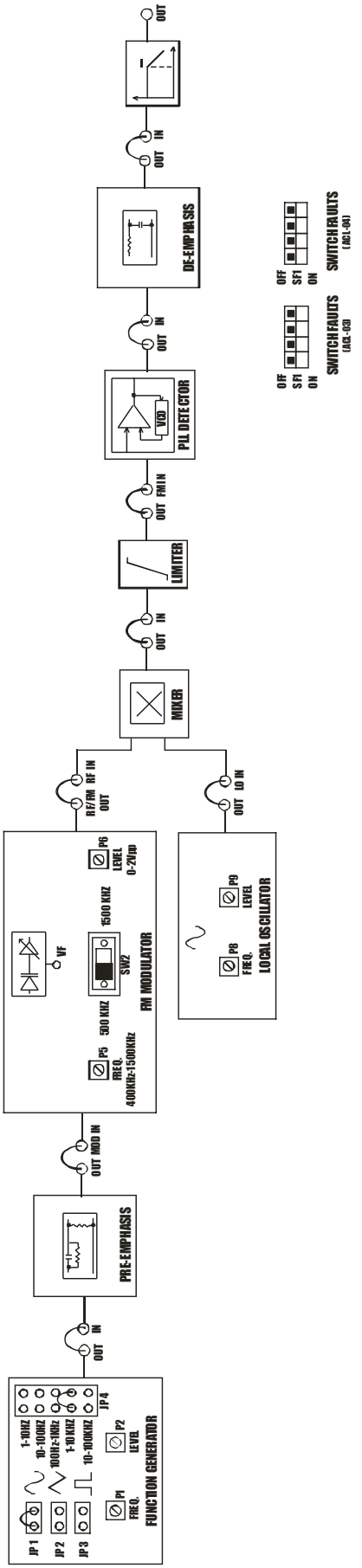

FIG.5.1 BLOCK DIAGRAM FOR EFFECT OF PRE-EMPHASIS AND DE-EMPHASIS USING VARACTOR MODULATOR AND PHASE LOCKED LOOP DETECTOR

EXPERIMENT NO: 5

NAME:-

To Study the effect of Pre-emphasis and De-emphasis circuit using Varactor Modulator and Different Demodulator Circuit's

OBJECTIVE:-

The objective of this experiment is to Study effect of pre-emphasis and de-emphasis on various modulation and demodulation methods.

A. To Study effect of pre-emphasis and de-emphasis with varactor modulator and the PLL detector as Frequency Demodulator.

B. To Study effect of pre-emphasis and de-emphasis with varactor modulator and the detuned resonance detector as Frequency Demodulator.

EQUIPMENTS:-

- ACL-FM , ACL-FD Kits
- Power supply
- Oscilloscope
- Frequency Meter

NOTE: Keep All the Switch Faults In Off Position

PROCEDURE:-

- Refer to the FIG. 5.1 & Carry out the following connections.
- Connect the o/p of Function Generator (ACL-FM) **OUT** post to the **IN** post of pre-emphasis circuit (ACL-FM).
- Connect the o/p of PREEMPHASIS **OUT** post to the I/p **MOD IN** of FM MODULATOR in ACL-FM.
- Connect the o/p of FM MODULATOR **RF/FM OUT** post to the I/p **RF IN** of MIXER in ACL-FM.
- Connect the power supply with proper polarity to the kit ACL-FM&ACL-FD, while connecting this; ensure that the power supply is OFF.
- Switch ON the power supply and Carry out the following presetting:
  - **FREQUENCY MODULATOR:** Switch on 500KHz; LEVEL about 1 Vpp; FREQ. About 450 KHz
  - **FUNCTION GENERATOR:** Sine wave (JP1); LEVEL about 100mVpp; FREQ. about 500Hz.
  - **LOCAL OSCILLATOR:** LEVEL about 1 Vpp; FREQ. About 1000KHz on (Center).
- Connect the LOCAL OSCILLATOR **OUT** to the **LO IN** of the MIXER and MIXER **OUT** to the LIMITER **IN** post with the help of shorting links.

- Then connect the LIMITER **OUT** post to the **IN** of phase locked loop Detector and **OUT** post to the **IN** of DEEMPHASIS CIRCUIT.
- Connect the DEEMPHASIS **OUT** to the **IN** of the LOW PASS FILTER.
- Then observe frequency modulated signal at FM/RF **OUT** post of FREQUENCY MODULATOR and achieve the same signal by setting frequency of LOCAL OSCILLATOR at **OUT** post of **MIXER,** then observe LIMITER OUT post where output is clear from noise and stabilize around a value of about 1.5Vpp.
- Also observe the signal at the output of pre-emphasis circuit , at the output of PLL detector circuit and at the output of de emphasis circuit, by varying in put modulating signal.
  From these observations you can clearly see the effect of the pre-emphasis and the de-emphasis circuit.

SWITCH FAULTS:-

Note: Keep the connections as per the procedure. Now put the corresponding switch fault button in ON position and observe the effect on the output . The faults are normally used one at a time

- Put switch 1 of SF1 in ACL-FM switch fault section to ON position. This will open capacitor C33 & Resistor R82 in the MIXER circuit. Hence the O/P signal will get disappear.
- Put switch 4 of SF1 in ACL-FM switch fault section to ON position. This will open the resistor R58 in local oscillator so there will not be variation in frequency signal.
- Put switch 1 of SF1 in ACL-FD switch fault section to ON position. This will open resistor R3 in limiter section. Due to this limiter action is disabled & the output of limiter will contain the amplitude variations.
- Put switch 3 of SF1 in ACL-FD switch fault section to ON position. This will open the resistor R27 connected to pin 11 of U4 (CD4046). This changes the center frequency of PLL and thus no output is obtained.
- Put switch 4 of SF1 in ACL-FD switch fault section to ON position. This will open the capacitor C19 in low pass filter thus the output will contain noise.

The Objective B Can Be Performed Same As The Procedure A Above, Just By Changing The Type Of The Demodulator As Per The Respective Objective.

EXPERIMENT NO.6

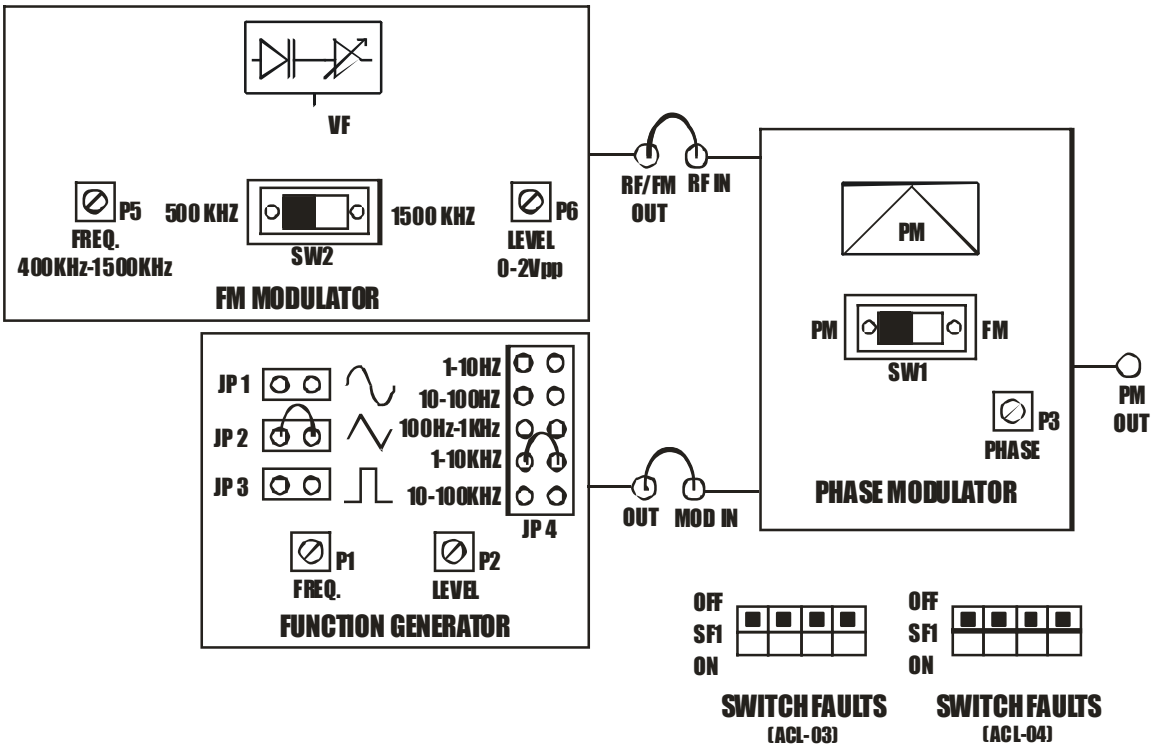

FIG.7.1 BLOCK DIAGRAM FOR PHASE MODULATION

EXPERIMENT NO: 6

NAME:-

Study of Phase Modulation

OBJECTIVE:-

The objective of this experiment is to Study Phase modulator.

THEORY:-

Phase Modulation:
It is a type of modulation in which the phase of high frequency sine wave (carrier) is varied in accordance with the instantaneous value of the modulating signal.

EQUIPMENTS:-

- ACL-FM & ACL-FD Kits.
- Power Supply.
- 20MHz oscilloscope.
- Frequency meter.
- Connecting Links.

NOTE: Keep All the Switch Faults In Off Position

PROCEDURE:-

Wave Forms of the Modulated Signal

- Refer to the FIG. 7.1 & Carry out the following connections.
- Connect the o/p of FREQUENCY MODULATOR (ACL-FM) **FM/RF OUT** post to I/p of Phase modulator **RF IN** post.
- Connect the **OUT** post of Function Generator (ACL-FM) to the **MOD IN** post of PHASE MODULATOR block of (ACL-FM).
- Connect the power supply with proper polarity to the kit ACL-FM&ACL-FD while connecting this; ensure that the power supply is OFF.
- Switch ON the power supply and Carry out the following presetting:
  - **FREQUENCY MODULATOR:** LEVEL about 2 Vpp; switch on 500 kHz; FREQ. about 450 kHz.
  - **FUNCTION GENERATOR:** Triangular (JP2); LEVEL about 0.5 Vpp; FREQ about 1kHz.

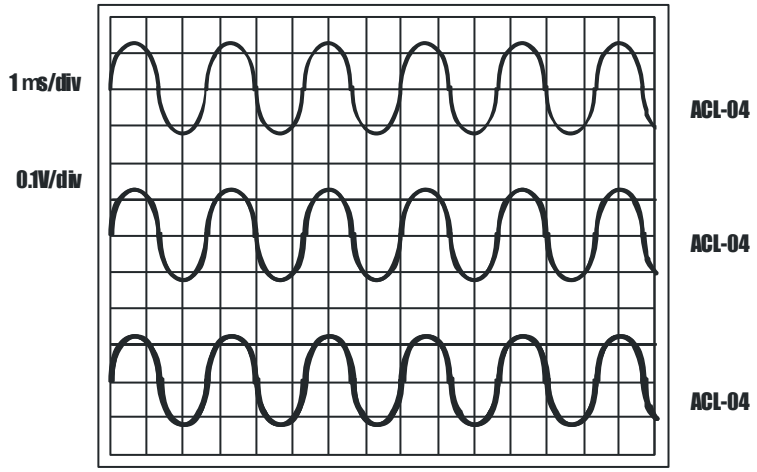

FIG 7.2

- Connect the oscilloscope (probes 10:1) to the input and output of the modulator (RF IN and OUT posts of PHASE MODULATOR.), and synchronize it to the input signal. Rotate the trimmer RV until the output signal reaches its maximum value. In this condition the resonant circuit is centered to the input carrier frequency (450 kHz). Check that the output signal is shifted of about 90° in respect to the input one. This shift is the global shift introduced by the modulator in absence of modulation.
- Keep the oscilloscope (probes 10:1) connected to the input of the modulator and synchronize it to the input signal.
- Gradually increase the amplitude of the modulating signal. If the modulator is calibrated to the carrier frequency, the oscilloscope detects wave forms as the ones of FIG. 7.2 (eventually vary RV to obtain such wave forms)
- As the output waveform posts out, the width of the trace obtained by adding more phase shifted sine waves keeps constant. This does not occur in the case of frequency modulated signal, where the trace widens moving from right to left (see FIG. 7.2).
  The amplitude variation of the phase modulated signal is due to the analogous variation introduced by the resonant circuit used as modulator.
- Vary P3 (which means the central frequency of the resonant circuit is varied) and examine how the output waveform of the modulator varies. Explain the reason. Tune the modulator again (via P3) to the carrier frequency.

SWITCH FAULTS:-

Note: Keep the connections as per the procedure. Now put the corresponding switch fault button in ON position and observe the effect on the output. The faults are normally used one at a time

- Put switch 2 of SF1 in ACL-FM switch fault section to ON position. This will open resistor R49 from the phase modulator and hence no variation in phase is obtained.
- Put switch 3 of SF1 in ACL-FM switch fault section to ON position. This will open the capacitor C24 .So NO modulation will take place.

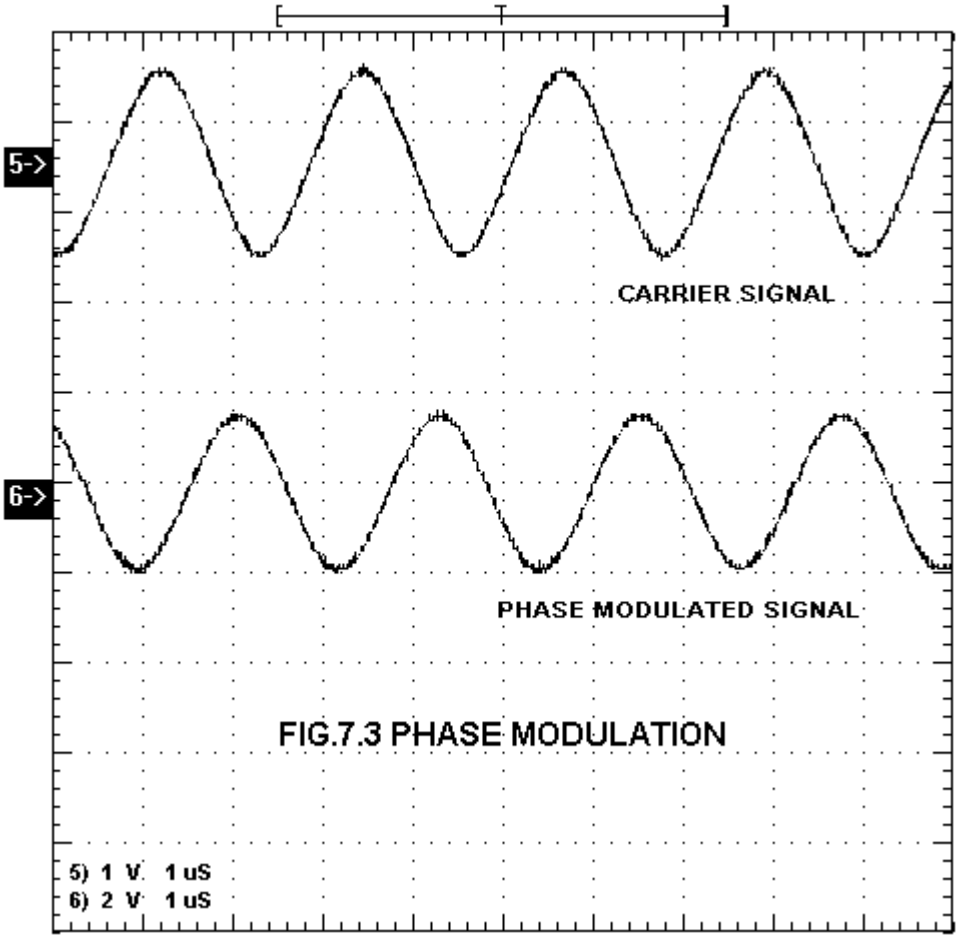

FIG.7.3 PHASE MODULATION

EXPERIMENT NO.7

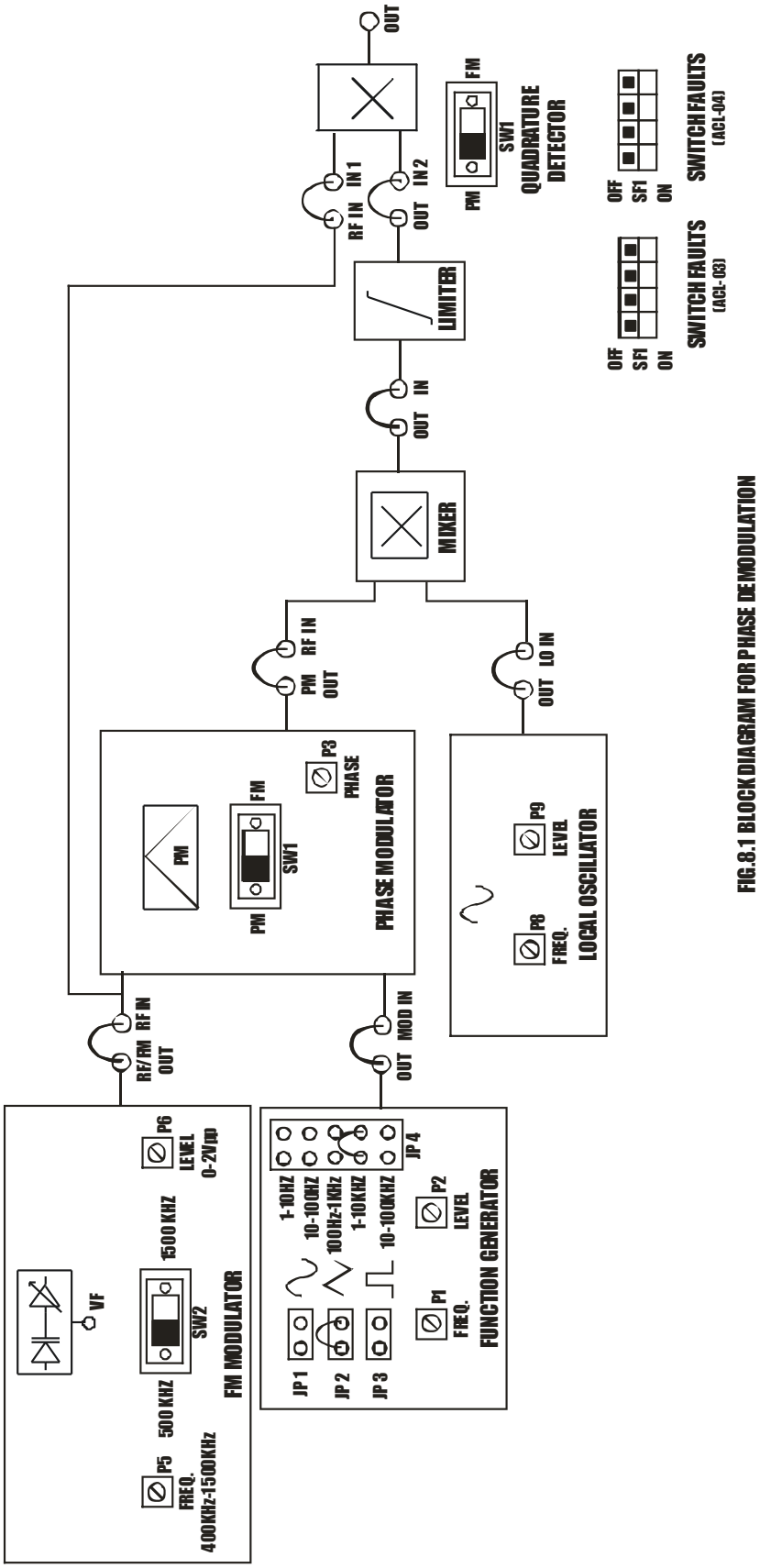

FIG.8.1 BLOCK DIAGRAM FOR PHASE DEMODULATION

EXPERIMENT NO: 7

NAME:-

Study of Phase Demodulation

OBJECTIVE:-

The objective of this experiment is to Study and observe the Waveforms of Phase Demodulated Signal.

EQUIPMENTS:-

- Modules ACL-FM & ACL-FD.
- Power Supply.
- 20MHz oscilloscope.
- Frequency meter.
- Connecting Links.

NOTE: Keep All the Switch Faults In Off Position

PROCEDURE:-

The quadrature detector supplies the output with the product of the two input signals. Consider the carrier signal and the phase modulated signal to be applied to the two inputs. The multiplication of the two signals produces different components, among which a low frequency component proportional to the phase difference between the same signals. This signal, which corresponds to the detected signal, is separated via the low pass filter.

- Refer to the FIG. 8.1 & Carry out the following connections.
- Connect the FM**/RF OUT** post of FREQUENCY MODULATOR block (ACL-FM) to the I/p of Phase modulator (ACL-FM) **RF IN** post.
- Connect the **OUT** post of Function Generator (ACL-FM) to the **MOD IN** post of PHASE MODULATOR block of (ACL-FM).
- Connect the **OUT** of Phase modulator (ACL-FM) post to the I/p of **RF IN** of mixer in ACL-FM post.
- Connect the LOCAL OSCILLATOR **OUT** to the **LO IN** of the MIXER and MIXER **OUT** to the LIMITER **IN** post with the help of shorting links.
- Then connect the LIMITER **OUT** post to the **IN2** of quadrature detector in QUADRATURE DETECTOR block and connect the same post of FM/RF OUT of FREQUENCY MODULATOR block as carrier to the **IN1** post.
- Connect the power supply with proper polarity to the kit while connecting this; ensure that the power supply is OFF.
- Switch ON the power supply and Carry out the following presetting:
    - **FUNCTION GENERATOR:** Triangular (JP2); LEVEL about 0.5 Vpp; FREQ about 1 kHz. PHASE MODULATOR: Switch on PM.

- **FREQUENCY MODULATOR:** LEVEL about 2 Vpp; Switch on 500 kHz; FREQ. 450 kHz.
- **LOCAL OSCILLATOR (ACL-FM):** LEVEL 1Vpp, Freq. About 1000KHz.
- Keep the demodulator selection switch in **PM** position

- Connect the oscilloscope to the modulating signal and to the detected signal (posts **OUT** of FUNCTION GENERATOR and OUT of QUADRATURE DETECTOR block.) and examine the waveforms. The amplitude variation of the modulated signal can be removed by inserting a limiter Circuit.
- Vary the amplitude of the modulating signal and observe the effect at outpost of QUADRATURE DETECTOR block.
- If the central frequency of the detector and the carrier frequency of the PM signal and local oscillator frequency coincides, you will obtain two signals similar to the ones of triangular wave generated at OUT post of FUNCTION GENERATOR, by varying phase shift **(pot P3)** you will get the same result.

SWITCH FAULTS:-

Note: Keep the connections as per the procedure. Now put the corresponding switch fault button in ON position and observe the effect on the output . The faults are normally used one at a time

- Put switch 1 of SF1 in ACL-FM switch fault section to ON position. This will open the capacitor C33 & Resistor R82 in the MIXER circuit. Hence the O/P signal will get disappear.
- Put switch 2 of SF1 in ACL-FM switch fault section to ON position. This will open resistor R49 from the phase modulator and hence no variation in phase is obtained.
- Put switch 3 of SF1 in ACL-FM switch fault section to ON position. This will open the capacitor C24 .So NO modulation will take place.
- Put switch 4 of SF1 in ACL-FM switch fault section to ON position. This will open resistor R58 in local oscillator so there will not be variation in frequency signal.
- Put switch 1 of SF1 in ACL-FD switch fault section to ON position. This will open resistor R3 in limiter section. Due to this limiter action is disabled & the output of limiter will contain the amplitude variations.
- Put switch 2 of SF1 in ACL-FD switch fault section to ON position. This will open the pin 4 of U2 (MC 1496) in quadrature detector section, this will disturb the output of the detector.

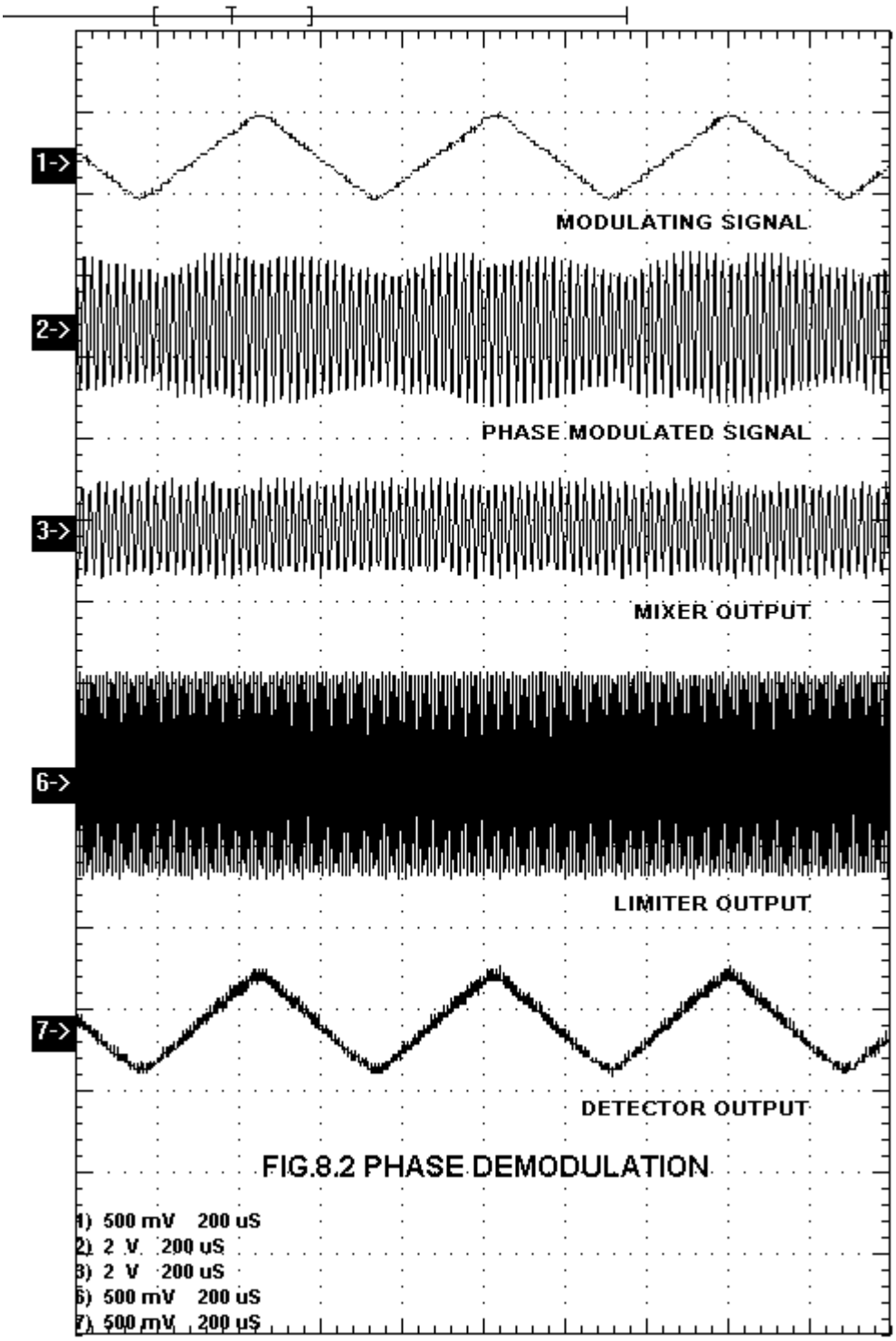
1->
MODULATING SIGNAL
2->
PHASE MODULATED SIGNAL
3->
MIXER OUTPUT
6->
LIMITER OUTPUT
7->
DETECTOR OUTPUT
FIG.8.2 PHASE DEMODULATION
1) 500 mV 200 uS
2) 2 V 200 uS
3) 2 V 200 uS
6) 500 mV 200 uS
7) 500 mV 200 uS

EXPERIMENT NO.8

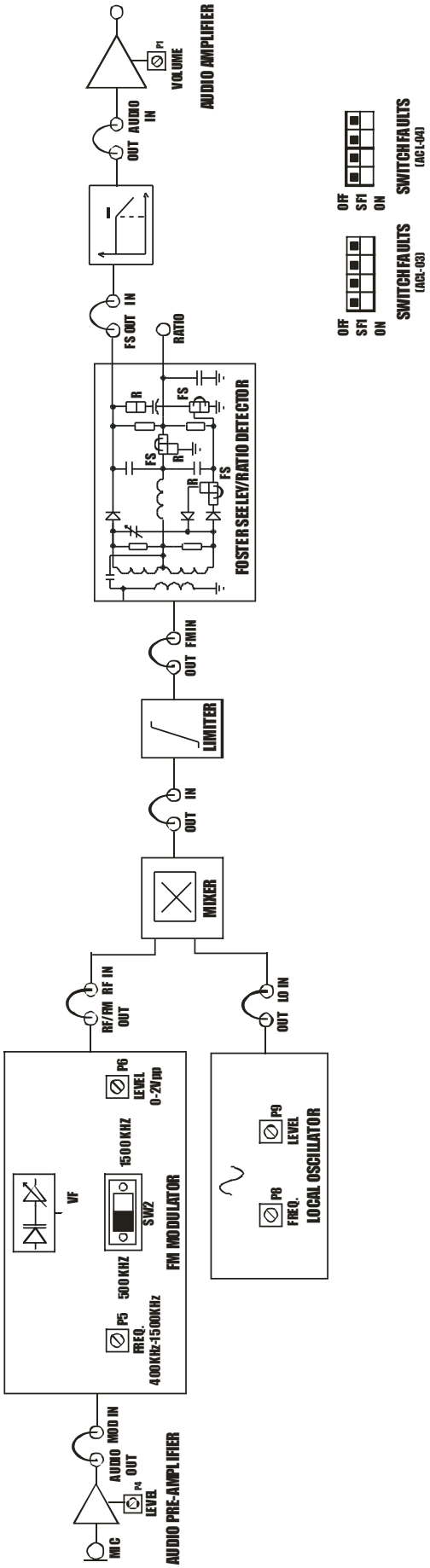

FIG.9.1 BLOCK DIAGRAM FOR VOICE COMMUNICATION THROUGH FM

EXPERIMENT NO:8

NAME:-

Voice Transmission on Various Modulation and Demodulation Methods

OBJECTIVE:-

The objective of this experiment is to Study voice transmission on various modulation and demodulation methods.

A. To study voice transmission on Frequency Modulation with varactor modulator and the foster-seeley detector as Frequency Demodulator.

B. To Study voice transmission on Frequency Modulation with varactor modulator and the Ratio Detector as Frequency Demodulator.

C. To Study voice transmission on Frequency Modulation with varactor modulator and the Phase Locked Loop Detector as Frequency Demodulator.

D. To Study voice transmission on Frequency Modulation with varactor modulator and the Quadrature Detector as Frequency Demodulator.

E. To Study voice transmission on Frequency Modulation with varactor modulator and the Detuned resonance Detector as Frequency Demodulator

F. To Study voice transmission on Phase Modulation and Phase Demodulation technique.

A. To Study Voice Transmission on Frequency Modulation with Varactor Modulator and the Foster-Seeley Detector as Frequency Demodulator

EQUIPMENTS:-

- Modules ACL-FM & ACL-FD.
- Power Supply.
- 20MHz oscilloscope.
- Frequency meter.
- Connecting Link.
- Dynamic Microphone.
- Microphone With Headphone

NOTE: Keep All The Switch Faults In Off Position.

PROCEDURE:-

- Refer to the FIG. 9.1 & Carry out the following connections.
- Connect the dynamic microphone provided with the kit to the socket marked **MIC IN** of AUDIO PREAMPLIFIER block.

- Connect the **OUT** post of AUDIO PREAMPLIFIER to **MOD IN** post of FREQUENCY MODULATOR block.
- Connect the o/p of FREQUENCY MODULATOR **FM/RF OUT** post to the I/p of **RF IN** of mixer in ACL-FM.
- Connect the power supply with proper polarity to the kit ACL-FM&ACL-FD, while connecting this; ensure that the power supply is OFF.
- Switch ON the power supply and Carry out the following presetting:
  - **FREQUENCY MODULATOR:** Switch on 500KHz; LEVEL about 1 Vpp; FREQ. about 450 KHz.
  - Frequency demodulator in Foster-Seeley mode (jumpers in FS position)
  - **FUNCTION GENERATOR:** Sine wave (JP1); LEVEL about 100mVpp; FREQ. about 1KHz.
  - **LOCAL OSCILLATOR:** LEVEL about 1 Vpp; FREQ. About 1000 KHz on (Center).
- Connect the LOCAL OSCILLATOR **OUT** to the **LO IN** of the MIXER and MIXER **OUT** to the LIMITER **IN** post with the help of shorting links.
- Then connect the LIMITER **OUT** post to the **FM IN** of FOSTER- SEELEY DETECTOR and **FS OUT** to the **IN** of LOW PASS FILTER.
  Connect the **OUT** post of LOW PASS FILTER to **AUDIO IN** post of Audio Amplifier.

- Connect headphones provided with the kit to the socket marked **SPEAKER** in the Audio Amplifier section of KIT.
- If the central frequency of the discriminator and the carrier frequency of the FM signal and local oscillator frequency coincides, you obtain good voice reception signals, Adjust VOLUME knob for amplification of voice to form audio link.

SWITCH FAULTS

Note: Keep the connections as per the procedure. Now put the corresponding switch fault button in ON position and observe the effect on the output . The faults are normally used one at a time.

- Put switch 1 of SF1 in ACL-FM switch fault section to ON position. This will open the capacitor C33 & Resistor R82 in the MIXER circuit. Hence the O/P signal will get disappear.
- Put switch 4 of SF1 in ACL-FM switch fault section to ON position. This will open resistor R58 in local oscillator so there will not be variation in frequency signal.
- Put switch 1 of SF1 in ACL-FD switch fault section to ON position. This will open resistor R3 in limiter section. Due to this limiter action is disabled & the output of limiter will contain the amplitude variations.
- Put switch 4 of SF1 in ACL-FD switch fault section to ON position. This will open the capacitor C19 in low pass filter thus the output will contain noise.

The Objectives B, C, D, E, F Can Be Performed Same As The Procedure A Above, Just By Changing The Type Of The Modulator And Demodulator As Per The Respective Objective.